ZA20J

Operation and Safety Manual

ZOOMLION

ZOOMLION INTELLIGENT ACCESS MACHINERY CO.,LTD.

Add:Tengfei Road 997, Wangcheng District, Changsha, Hunan,PRC

Zip Code:410200

E-mail:awm@zoomlion.com

Tel:400-800-0157

Open up the WeChat, Scan the QR code above; All rights reserved 2015©Zoomlion,reserves all rights,Without the written permission of Zoomlion, the contents of any part of this sample may not be copied for any purpose.

ZOOMLION

ZA20J
Operation and Safety Manual

Foreword

ZOOMLION appreciates your choice of our machine for your application. The Operation and Safety Manual must be read and understood in its entirety before operating the machine.

This manual introduces you safety information, significant technical specs, safety operation in detail for working efficiency improving. Keep this manual properly at all times for looking up.

Do not operate the machine if there is any doubt in operation, please consult local service team for troubleshooting. ZOOMLION AWP Machinery Company does not take the consequence of wrong operation.

This manual should be considered a permanent part of your machine and should remain with the machine at all times.

The content is under intellectual property protection, permission is required for a copy or other application.

There might be some tiny differences in details between your machine and the upgraded one due to the continuous improving. For clarification, questions, or additional information regarding any portions of this manual, Contact ZOOMLION AWP Machinery

Our company reserves the right to modify this manual as technical improvement without notice.

Thank you for your trust and support for ZOOMLION products!

Zoomlion Intelligent Access Machinery Co.,Ltd.

Safety Precaution Icons

This manual has the following safety precaution icons:

DANGER	**Failure to comply with the safety precautions listed in this manual could result in personal injury or death.**
WARNING	**Failure to comply with the safety precautions listed in this manual could result in potential personal injury or death.**
CAUTION	**Failure to comply with the safety precautions listed in this manual could result in potential mild personal injury.**
NOTICE	**Indicates risks unrelated with personal injury (such as property damage).**

Contents

Foreword I
Safety Precaution Icons II
Contents III

SECTION 1 SAFETY PRECAUTIONS 1-1
1.1 General 1-1
1.2 Pre-operation 1-1
1.3 Hazard Classification 1-2
1.4 Intended Use 1-2
1.5 Safety Alert Symbols and Maintenance 1-2
1.6 Safety Operation 1-5
1.6.1 Operator safaty 1-5
1.6.2 Workplace safety 1-5

SECTION 2 MACHINE COMPONENTS AND CONTROLS 2-1
2.1 Machine Components 2-1
2.2 Machine Controls and Indicators 2-2
2.2.1 Ground control console 2-2
2.2.2 Ground control indicator panel 2-5
2.2.3 Platform control console 2-12
2.2.4 Platform control indicator panel 2-15
2.2.5 Safety device 2-18

SECTION 3 MACHINE INSPECTION 3-1
3.1 General 3-1
3.1.1 Pre-start inspection principle 3-1
3.1.2 Pre-start inspection 3-1
3.2 Function Check 3-3
3.2.1 Pre-start inspection principle 3-3
3.2.2 Ground function check 3-3
3.2.3 Platform function check 3-4
3.3 Workplace Inspection 3-6
3.3.1 Workplace inspection principle 3-6
3.3.2 Workplace inspection 3-6
3.4 Decal Inspection 3-7

Contents

SECTION 4 OPERATION INSTRUCTION....4-1
4.1 General....4-1
4.2 Machine Operation....4-1
4.2.1 Engine operation....4-1
4.2.2 Drive operation....4-3
4.2.3 Platform leveling....4-4
4.2.4 Platform rotating....4-4
4.2.5 Turntable slewing....4-5
4.2.6 Raise and lowering the upper boom....4-5
4.2.7 Telescoping the upper boom....4-5
4.2.8 Raising and lowering the tower boom....4-5
4.2.9 Raising and lowering the jib....4-5
4.2.10 Emergency stop....4-5
4.2.11 Auxiliary power....4-6
4.2.12 Shut down and park....4-6
4.3 Transport and Lifting....4-7
4.3.1 Release the brake while towing....4-7
4.3.2 Lifting....4-8
4.3.3 Securing the chassis....4-8
4.3.4 Securing the platform....4-8

SECTION 5 MAINTENANCE....5-1
5.1 General....5-1
5.1.1 Maintenance symbols legend....5-1
5.1.2 Pre-start inspection....5-1
5.1.3 Maintenance hazards....5-2
5.1.4 Body injury hazard....5-2
5.2 Power and Hydraulic System Maintenance....5-3
5.2.1 Check the engine oil level....5-3
5.2.2 Check the engine coolant level....5-3
5.2.3 Check hydraulic oil....5-3
5.3 Battery Maintenance....5-6
5.4 Regular Maintenance....5-8
5.4.1 Rotation Reduction Gears....5-9

Contents

5.4.2 Hydraulic Return Filter 5-10
5.4.3 Travelling Reduction Gears 5-11
5.4.4 Engine oil、Engine oil filter 5-12
5.4.5 Fuel filter 5-13
5.4.6 Air filter 5-14
5.4.7 Engine coolant 5-14
5.4.8 DPF (Diesel Particulate Filter, for Euro Stage V machine only) 5-15
5.5 Engine cold start 5-16
5.6 Fuel system exhaust 5-17
5.5 Engine 5-16
5.6 Tire and Wheel 5-17

SECTION 6 STORAGE AND EX-FACTORY TEST 6-1
6.1 Storage Conditions 6-1
6.2 Ex-factory Test Items 6-1

SECTION 7 TECHNICAL PARAMETER 7-1

ZOOMLION

Operation and Safety Manual

Section 1 Safety Precautions

SECTION 1 SAFETY PRECAUTIONS

1.1 General

To Owners/Users/Operators:

Zoomlion appreciates your choice of our machine for your application. Our number one priority is user safety, which is best achieved by our joint efforts. The following requirements need to be adhere to for the purpose of safety operating:

a) Obey all user rules, job site regulations and governmental regulations;
b) Read, understand and obey all operating instructions on the machine and in this manual;
c) Keep good safety operating conventions;
d) Allow only those authorized and qualified personnel to operate the machine under the supervision of an experienced and qualified operator;
e) An operator must not operate the machine if he has any doubts.

Zoomlion appreciates your choice of our machine for your application.

1.2 Pre-operation Cautions

DANGER

Failure to comply with the safety precautions listed in this manual could result in personal injury or death.

An operator must not operate the machine, only if:

a) He has learned and practiced the principles of safe machine operation contained in this operational manual;
   1) Avoid hazardous situations;
   2) Be aware of safety rules before further operation;
   3) Perform a pre-operation inspection at all times;
   4) Implement functional test before operating the machine at all times;
   5) Inspect job site;
   6) Only use the machine as it was intended.
b) Read, understand and obey the manufacturer's instructions and safety rules—safety and operator's manuals and machine decals;
c) Read, understand and obey employer's safety rules and work site regulations;
d) Read, understand and obey all applicable governmental regulations;
e) The operator is properly trained to safely operate the machine.

1.3 Hazard Classification

Decals on this machine use symbols, color coding, and signal words to identify the following:

Safety alert symbol—used to alert you to potential personal injury hazards. Obey all safety messages that follow this symbol to avoid possible injury or death.

Indicates a hazardous situation which, if not avoided, will result in death or serious injury. This decal will have a red background.

Indicates a hazardous situation which, if not avoided, could result in death or serious injury. This decal will have an orange background.

Indicates a hazardous situation which, if not avoided, could result in minor or moderate injury. This decal will have a yellow background.

Indicates a property damage message. This decal will have a blue background.

1.4 Intended Use

This machine is intended to be used only to lift personnel, along with their tools, and materials to an aerial work site.

1.5 Safety Alert Symbols and Maintenance

Replace any missing or damaged safety signs. Keep operator safety in mind at all times. Use mild soap and water to clean safety signs. Do not use solvent-based cleaners because they may damage the safety sign material.

Read operational manual	Read service manual	Fire hazard	No smoking	Explosion hazard
Electrocution hazard	Burn hazard	Prohibit Step on	Avoid contact	Maintain required clearance
Electrocution hazard	Tip-over hazard	Tip-over hazard	Tip-over hazard	Tip-over hazard
Wheel load	Wind speed	Maximum capacity	Tie-down point	Lanyard anchorage points
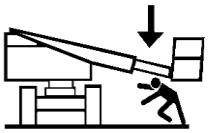				
Crushing hazard	Disconnect battery	Manual force	Collision Hazard	Maintain safety distance

Figure 1-1 Symbol and hazard pictorials definitions

	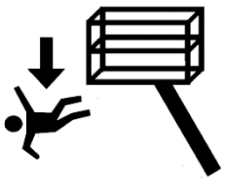			
Runaway hazard	Fall Hazards	Tire disassembly	Explosion hazard	No smoking. No flame. Stop engine.
			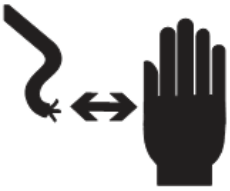	
Stop engine.	Prohibit Lifting	Lifting point	Avoid contact	Trained and authorized personnel operate the machine only
Recovery procedure if tilt alarm sounds while elevated 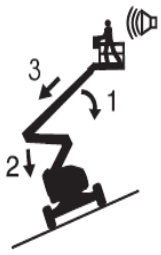 				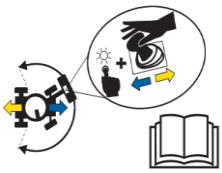
Platform uphill: 1. Lower the upper boom; 2. Lower the tower boom; 3.Retract the upper boom.	Platform downhill: 1. Retract the upper boom; 2. Lower the tower boom; 3. Lower the upper boom.	Prohibit high pressure water-beaktest	Prohibit modify the limit switches	Color coded direction arrows
Collision Hazard	High temperature surface	Avoid contact	Fill fuel oil	Crushing hazard

Figure 1-1 Symbol and hazard pictorials definitions (continuous)

1.6 Safety Operation

1.6.1 Operator safety

Personal Fall Protection

Personal fall protection equipment (PFPE) is required when operating this machine. If PFPE is required in job site or in operator's manual, the following rule should be complied with:

all PFPE must comply with applicable governmental regulations, and must be inspected and used in accordance with the PFPE manufacturer’s instructions.

1.6.2 Workplace safety

DANGER

This machine is not electrically insulated and will not provide protection from contact with or proximity to electrical current.

a) Obey all local and governmental regulations regarding required clearance from electrical power lines.At a minimum, the required clearance contained in the table below must be followed. Allow for platform movement, electrical line sway or sag, and beware of strong or gusty winds;

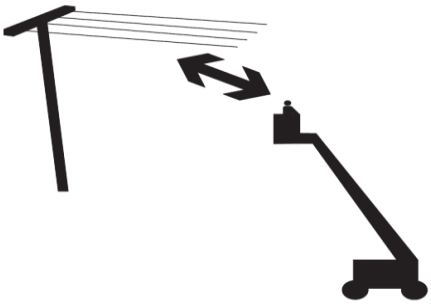

Table 1-1 Required clearance

No.	Line Voltage	Required Clearance	
1	0 to 50KV	3.05 m	10ft
2	50 to 200KV	4.60 m	15ft 1in
3	200 to 350KV	6.10 m	20ft
4	350 to 500KV	7.62 m	25ft
5	500 to 750KV	10.67m	35ft
6	750 to 1000KV	13.72m	45ft

b) Allow for platform movement, electrical line sway or sag, and beware of strong or gusty winds;

c) Keep away from the machine if it contacts energized power lines. Personnel on the ground or in the platform must not touch or operate the machine until energized power lines are shut off.

Do not operate the machine during lightning or storms.

Do not use the machine as a ground for welding.

DANGER

Tip-over hazard

Occupants, equipment and materials shall not exceed the maximum platform capacity.

Table 1-2 Rated load

Maximum platform capacity Rated Load (unrestricted)	Maximum occupants	Maximum platform capacity Rated Load (restricted)	Maximum occupants
250 kg/550lb	2	360 kg/793 lb	2

a) Do not exceed the maximum platform capacity;

b) Do not attach a platform rated at 250 kg/550lb (unrestricted range of motion) or 360 kg/793lb (restricted range of motion) to machines with any other rated load. See the serial label for the maximum rated capacity;

c) The weight in options and accessories (such as pipe, panel bracket and welder) will reduce rated platform capacity and must be factored into total platform load.See the decals with the options and accessories;

d) If using accessories, read, understand and obey the decals and instructions with the accessory;

e) Do not raise or extend the boom unless the machine is on a firm, level surface.

Do not depend on the tilt alarm as a level indicator. The tilt alarm sounds in the platform only when the machine is on a severe slope.

If the tilt alarm sounds when the platform is raised, use extreme caution. Identify the condition of the boom on the slope as shown below. Follow the steps to lower the boom before moving to a firm, level surface. Do not rotate the boom while lowering.

a) If the tilt alarm sounds with the platform uphill:
   1) Lower the upper boom;
   2) Lower the tower boom;
   3) Retract the upper boom.

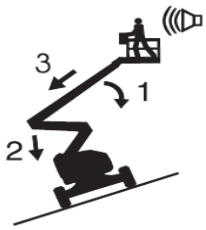

b) If the tilt alarm sounds with the platform downhill:
   1) Retract the upper boom;
   2) Lower the tower boom;
   3) Lower the upper boom.

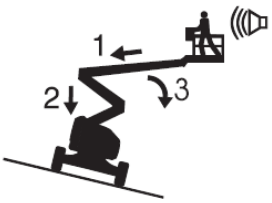

Do not raise the boom when wind speeds may exceed 12.5 m/s (28mph).

If wind speeds exceed 12.5 m/s (28mph) when the boom is raised, lower the boom and do not continue to operate the machine. Do not operate the machine in strong or gusty winds. Do not increase the surface area of the platform or the load. Increasing the area exposed to the wind will decrease machine stability.

Table 1-3 Beaufort scale

Beaufort scale	Wind speed		Instruction
0	0 0-0.2 m/s	0-0.45mph	Calm
1	0.3-1.5 m/s	0.67-3.36mph	Light air
2	1.6-3.3 m/s	3.58-7.38mph	Light breeze
3	3.4-5.4 m/s	7.61-12.08mph	Gentle breeze
4	5.5-7.9 m/s	12.30-17.67mph	Moderate breeze
5	8.0-10.7 m/s	17.90-23.94mph	Fresh breeze
6	10.8-13.8 m/s	24.16-30.87mph	Strong breeze
7	13.9-17.1 m/s	31.09-38.25mph	Moderate gale
8	17.2-20.7 m/s	38.48-46.30mph	Fresh gale
9	20.8-24.4 m/s	46.53-54.58mph	Strong gale

a) Use extreme care and slow speeds while driving the machine in the stowed position across uneven terrain, debris, unstable or slippery surfaces and near holes and drop-offs;
b) Do not drive the machine on or near uneven terrain, unstable surfaces or other hazardous conditions with the boom raised or extended;
c) Never attempt to use the machine as a crane;
d) Do not push the machine or other objects with the boom;
e) Do not contact adjacent structures with the boom;
f) Do not tie the boom or platform to adjacent structures;
g) Do not place loads outside the platform perimeter;
h) Do not alter or disable machine components that in any way affect safety and stability;
i) Do not replace items critical to machine stability with items of different weight or specification;
j) Do not replace factory-installed tires with tires of different specification or ply rating;
k) Do not use air-filled tires. These machines are equipped with foam-filled tires. Wheel weight is critical to stability;
l) Do not use the platform controls to free a platform that is caught, snagged, or otherwise prevented from normal motion by an adjacent structure. All personnel must be removed from the platform before attempting to free the platform using the ground controls;
m) Do not modify or alter an aerial work platform without prior written permission from the manufacture. Mounting attachments for holding tools or other materials onto the platform, toe boards, or guard rail system can increase the weight in the platform and the surface area of the platform or the load;
n) Do not push off or pull toward any object outside of the platform.

DANGER

Tip-over hazard

Manual force cannot be greater than specification when operating, otherwise may cause tipping over.

Table 1-4 Maximum allowable manual force

Model	Manual force	Maximum occupants
ZA64J	400 N/90 lbs forse	2

a) Do not place or attach fixed or overhanging loads to any part of this machine;

b) Do not place ladders or scaffolds in the platform or against any part of this machine;

c) Do not transport tools and materials unless they are evenly distributed and can be safely handled by person(s) in the platform;

d) Do not use the machine on a moving or mobile surface or vehicle;

e) Be sure the tires are in good condition and the lug nuts tightened, besides the tightening torque should be 300Nm;

f) Do not drive the machine on a slope that exceeds the maximum uphill, downhill or side slope rating of the machine. Slope rating applies only to machines in the stowed position.

Table 1-5 Maximum slope rating, stowed position

Maximum slope rating, stowed position	
Platform uphill	45% (24°)
Platform downhill	30% (17°)
Side slope	25% (14°)

Note: slope rating is subject to ground conditions with one person in the platform and adequate traction. Additional platform weight may reduce slope rating.

DANGER

Fall Hazards

a) Occupants must wear a safety belt or harness in accordance with governmental regulations. Attach the lanyard to the anchor provided in the platform;

b) Do not sit, stand or climb on the platform guard rails. Maintain a firm footing on the platform floor at all times;

c) Do not climb down from the platform when raised;

d) Keep the platform floor clear of debris. Use extreme care while entering or exiting the platform. Do not enter or exit the platform unless the machine is in the stowed position. Enter or exit the platform through the gate only. Face the machine and ensure "three-point contact" with the machine (two hands and one foot, or two feet and one hand) while entering or exiting the platform.

DANGER

Collision Hazard

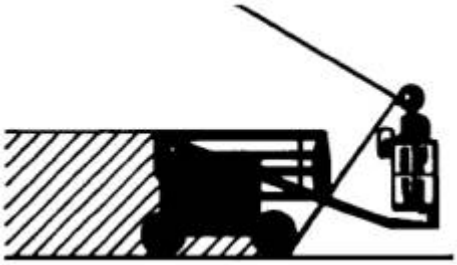

a) Be aware of limited sight distance and blind spots when driving and operating;

b) Check the work area for overhead obstructions or other possible hazards;

c) Be aware of crushing hazards when grasping the platform guard rail;

d) Be aware of the boom position and tail swing when rotating the turntable;

e) Operators must comply with employer, job site, and governmental rules regarding use of personal protective equipment.

DANGER

Do not lower the boom unless the area below is clear of personnel and obstructions.

Limit travel speed according to the condition of the ground surface, congestion, slope, location of personnel, and any other factors which may cause collision.

Observe and use the color-coded direction arrows on the platform controls and drive chassis for drive and steer functions.

Do not operate a boom in the path of any crane unless the controls of the crane have been locked out and/or precautions have been taken to prevent any potential collision.

No stunt driving or horseplay while operating a machine.

DANGER

Body Injury Hazard

a) Do not operate a machine with a hydraulic oil or air leak. An air leak or hydraulic leak can penetrate and/or burn skin;

b) Improper contact with components under any cover will cause serious injury. Only trained maintenance personnel should access compartments.

Suggestion: access by the operator is only advised when performing a pre-operation inspection. All compartments must remain closed and secured during operation.

DANGER

Explosion and Fire Hazards

Do not operate the machine or charge the battery in hazardous locations or locations where potentially flammable or explosive gases or particles may be present.

DANGER

Damaged Machine Hazard

a) Do not use a damaged or malfunctioning machine. Conduct a thorough pre-operation inspection of the machine and test all functions before each work shift;
b) Immediately tag and remove from service a damaged or malfunctioning machine;
c) Be sure all maintenance has been performed as specified in this manual and the appropriate Zoomlion service manual;
d) Be sure all decals are in place and legible;
e) Be sure operator's, safety, and responsibilities manuals are complete, legible, and in the storage container located on the machine.

DANGER

Component Damaged Hazard.

Do not use non-original chargers to charge batteries.

Do not use the machine as a ground for welding.

Battery Safety

Burn hazard

a) Batteries contain acid. Always wear protective clothing and eye wear when working with batteries;

b) Avoid spilling or contacting battery acid. Neutralize battery acid spills with baking soda and water;

c) Do not expose the battery or charger in water or rain while charging.

Explosion Hazard

a) Keep sparks, flames, and lighted tobacco away from batteries. Batteries emit explosive gas.

b) Do not use tools which could produce flames to contact battery terminals or cable clamp.

Electrocution/Burn Hazard

a) Conduct daily check with wires and cables;

b) Change damaged items prior to operation. Avoid contact with battery terminals. Remove all rings, watches and jewelry.

ZOOMLION

Operation and Safety Manual

Section 2 Machine Components and Controls

SECTION 2 MACHINE COMPONENTS AND CONTROLS

2.1 Machine Components

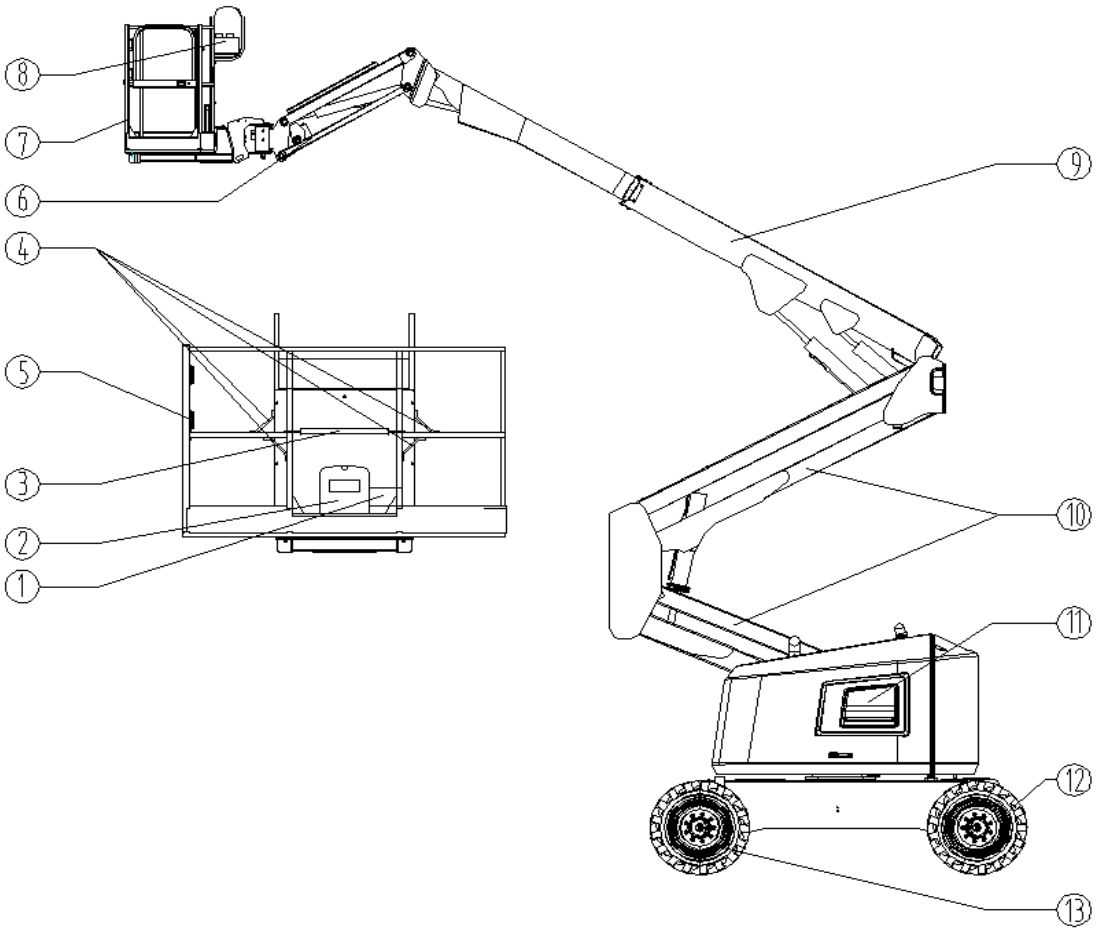

Figure 2-1 Components

Table 2-1 Component instruction

No.	Name	No.	Name
1	Foot switch	8	Platform console
2	Manual storage container	9	Main boom (upper boom)
3	Sliding mid-rail	10	Tower boom
4	Lanyard anchorage points	11	Ground control console
5	Swing gate	12	Steering tire
6	Jib	13	Non-steering tire
7	Work platform		

2.2 Machine Controls and Indicators

CAUTION

The manufacturer has no direct control over machine application and operation. The user and operator are responsible for conforming with good safety practices.

2.2.1 Ground control console

WARNING

1.Boom lift, Boom extend/retract, Tower boom lift, Turntable swing, Jib lift, platform leveling, platform rotating device and auxiliary control device both equip with spring so that they will back to neutral when releasing;

2.To avoid serious injury, do not operate machine if any control levers or toggle switches controlling platform movement do not return to the off position when released;

3. Ensure there is no personnel under or surrounding the platform.

CAUTION

Note: The Function Enable switch must be held down in order to operate Main Boom Lift/Telescope, Tower Lift, Swing, Jib Lift, Platform Level Override, and Platform Rotate functions.

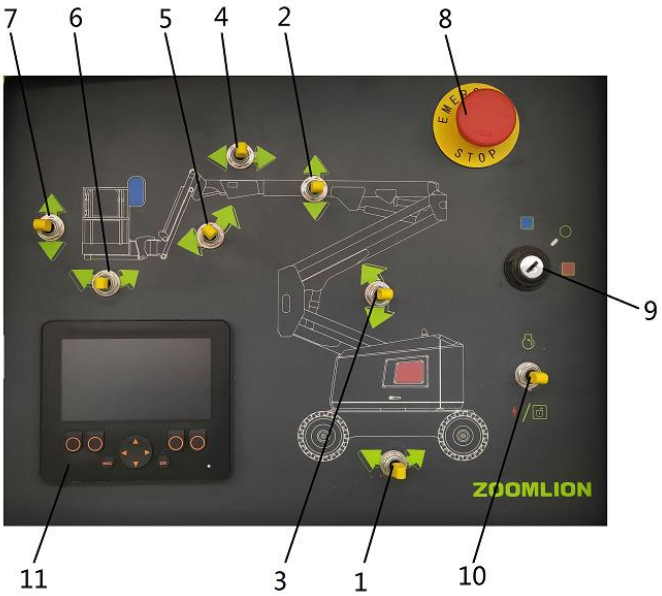

Figure 2-2 Ground control panel

Table 2-2 Ground Control Panel Instruction

No.	Name
1	Turntable slew switch
2	Main boom lift switch
3	Tower boom lift switch
4	Main boom telescope switch
5	Jib lift switch
6	Platform rotate switch
7	Platform leveling switch
8	Power/Emergency stop switch
9	Platform/Ground Select Switch
10	Engine Start/ Auxiliary Power/Function Enable Switch
11	Display

1) Turntable slew switch

Provide 360° continuous rotating.

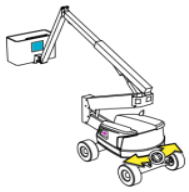

2) Main boom lift switch

Provide main boom raising/lowering when positioning up or down.

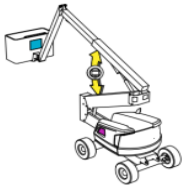

3) Tower boom lift switch

Provides raising and lowering of the tower boom.

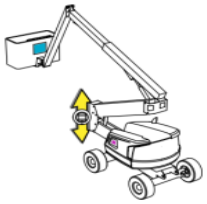

4) Main boom telescope switch

Provide extension and retraction of the main boom.

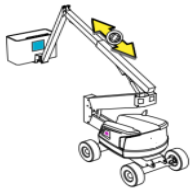

5) Jib lift switch (if equipped)

Provide raising and lowering of the jib.

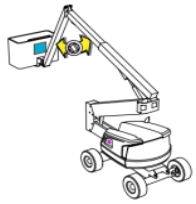

6) Platform rotate switch

Provides platform rotate controls.

WARNING

Only the platform leveling override function for slight leveling of the platform when platform is lowered. Incorrect use could cause the load/occupants to shift or fall. Failure to do so could result in death or serious injury.

7) Platform leveling switch

A three position switch allows the operator to adjust the automatic self leveling system.This switch is use to adjust platform level in situations such as ascending/descending a grade.

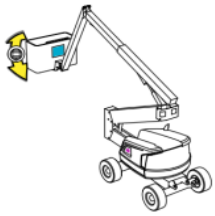

CAUTION

When the machine is shut down the power/emergency stop switch must be positioned to OFF to prevent draining the batteries.

8) Power/Emergency stop switch

A two-position red mushroom shaped switch supplies power to PLATFORM/GROUND SELECT switch when pulled out(on).

When pushed in(off), power is shut off to the PLATFORM/GROUND SELECT switch.

9) Platform/Ground Select Switch

The three position, key operated switch supplies power to the platform control console when positioned to PLATFORM.With the switch key turned to the GROUND position only ground controls are operable.

The three position, key operated switch positions to middle, platform mode and ground mode shut off at the same time.

CAUTION

Do not enable any of the above motion functions at the same time when operating auxiliary power. (Operate several movement at the same time will cause auxiliary pump motor overloaded.)

10) Engine/ Auxiliary Power/Function Enable Switch

Hold the switch in the UP position to start the engine. Turn off the engine and toggle the switch to DOWN position to active auxiliary pump. Auxiliary pump is used to provide sufficient oil flow to activate the basic function of the machine when the main pump or engine fails.

When the engine is running, the switch must be held "DOWN" to enable all boom controls.

11) Display

Display shows fault conditions, function parameters, parameter modification and machine information.

2.2.2 Ground control indicator panel

Two different generations of displays have been used on the machine, and their operations are not the same.

Main interface in the first generation display is as follows:

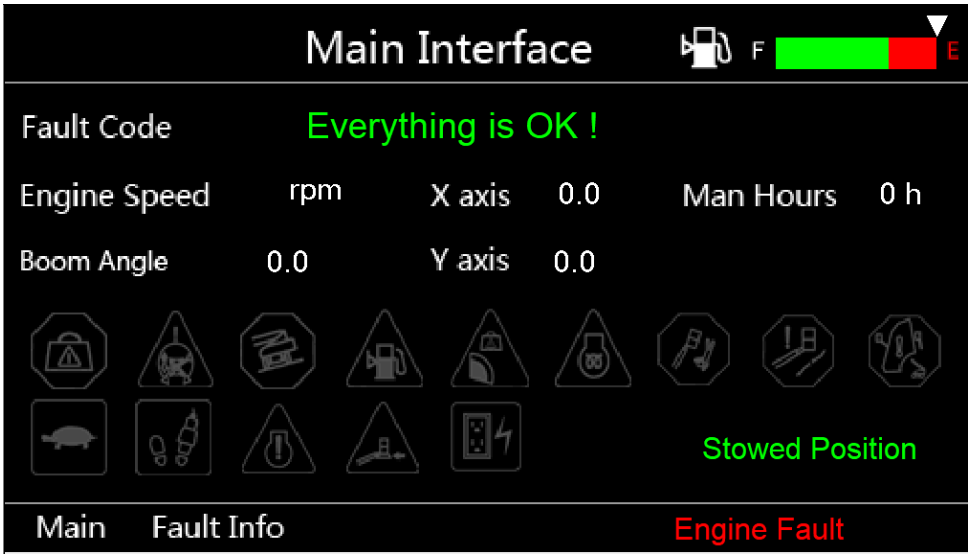

Figure 2-3

The function classification is as shown below:

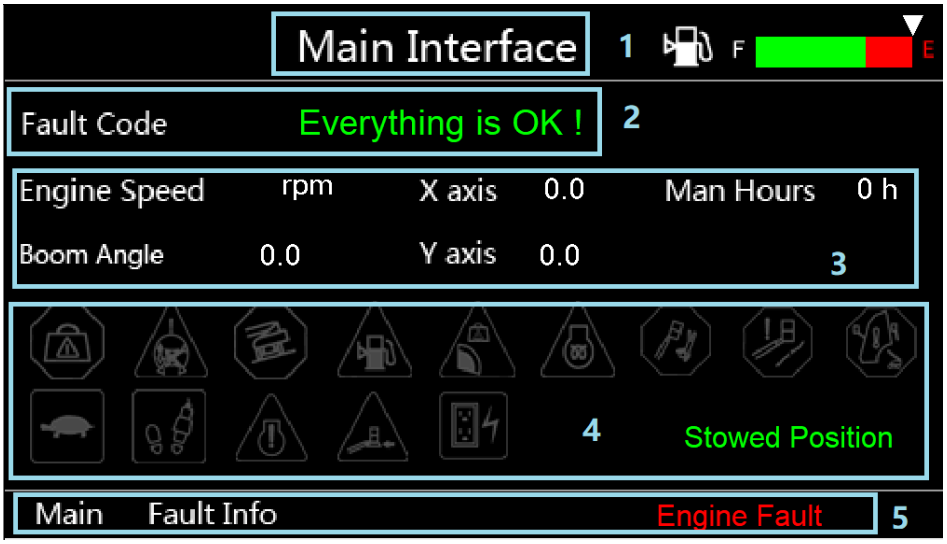

Figure 2-4

No.1 indicates title; No.2 indicates fault code; No.3 indicates dynamic parameter monitor; No.4 indicates status indicator, stowed position and work station; No.5 indicates the navigation bar.

When the articulating boom lift is in stowed position with no fault code, the interface is as shown below:

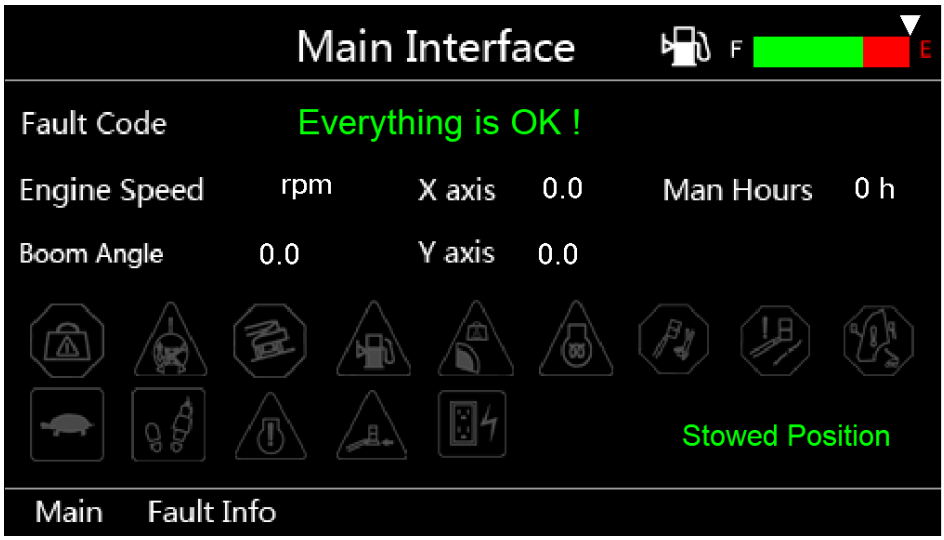

Figure 2-5

When the articulating boom lift is in working position with no fault code, the interface is as shown below:

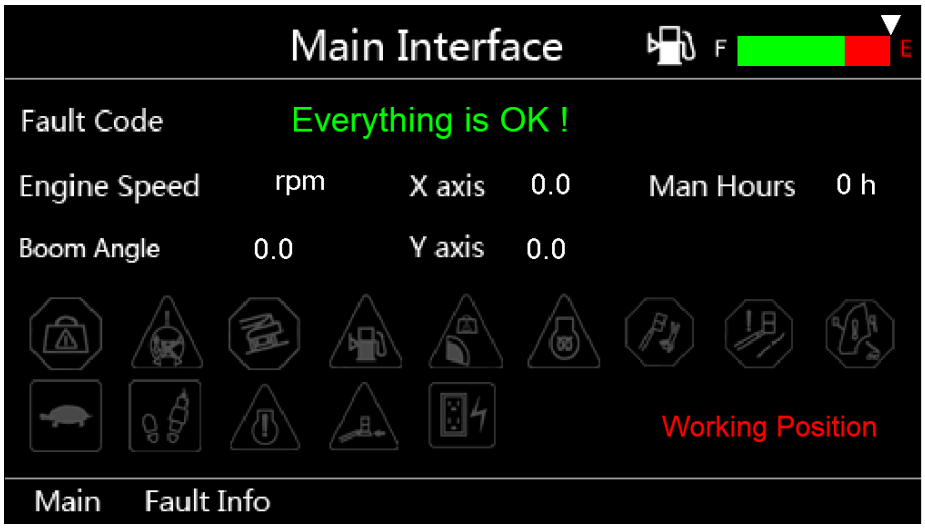

Figure 2-6

If the articulating boom lift is in stowed position without system failure alarm, but the engine failure occurs, the interface is as shown below, and the engine failure icon flashes in real time.

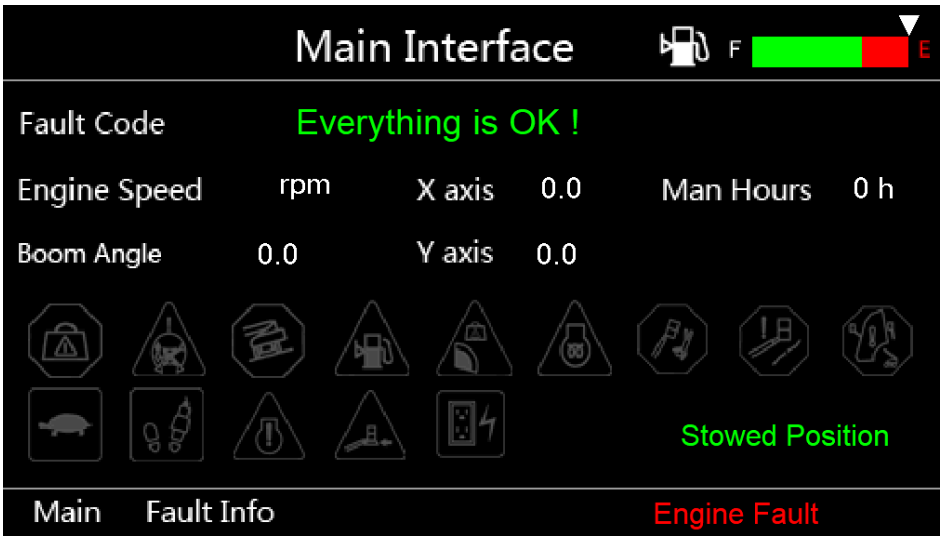

Figure 2-7

In such case, press the engine failure button to enter the engine failure page, and check the engine fault code in real time, which is convenient for troubleshooting. The interface is as shown below. After troubleshooting, the flashing indicator of engine failure on the navigation bar will disappear.

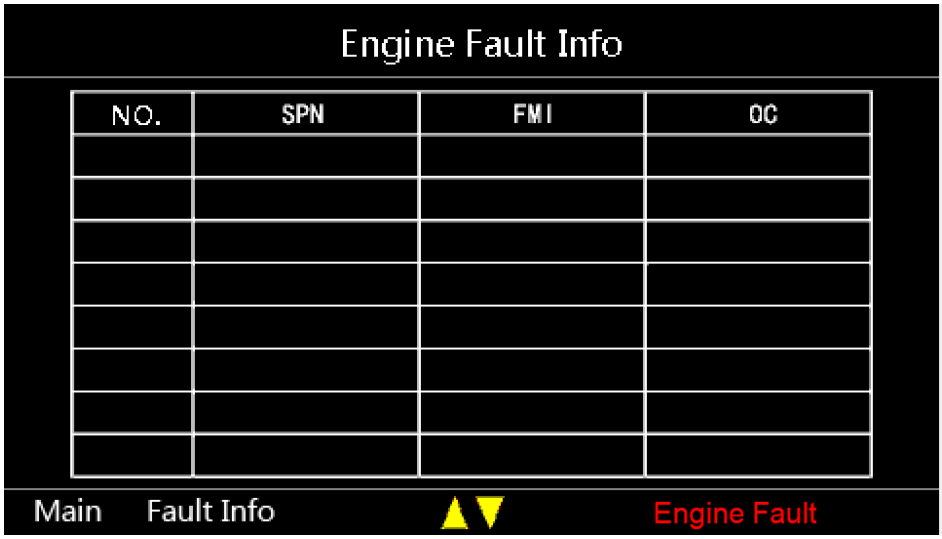

Figure 2-8

Click the main interface back to the page shown in Figure 2-7. when the system alarms, the fault code will scroll in the display bar to show the fault code and failure description, see the detail in below:

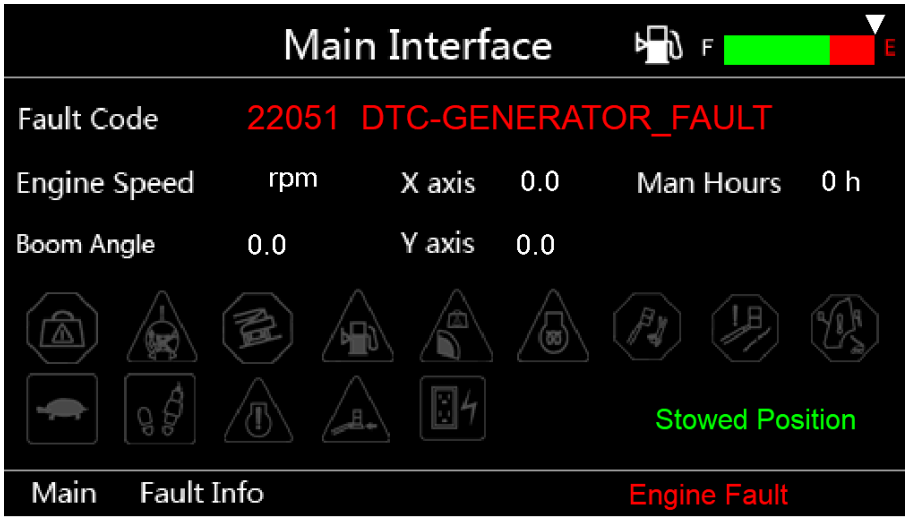

Figure 2-9

22051 indicates fault code and DTC_GENERATOR_FAULT indicates fault description.

When a system failure occurs, the Fault Description button in the navigation bar is activated. Click the button to enter the fault description page and view the fault lift in detail, as shown in the following figure:

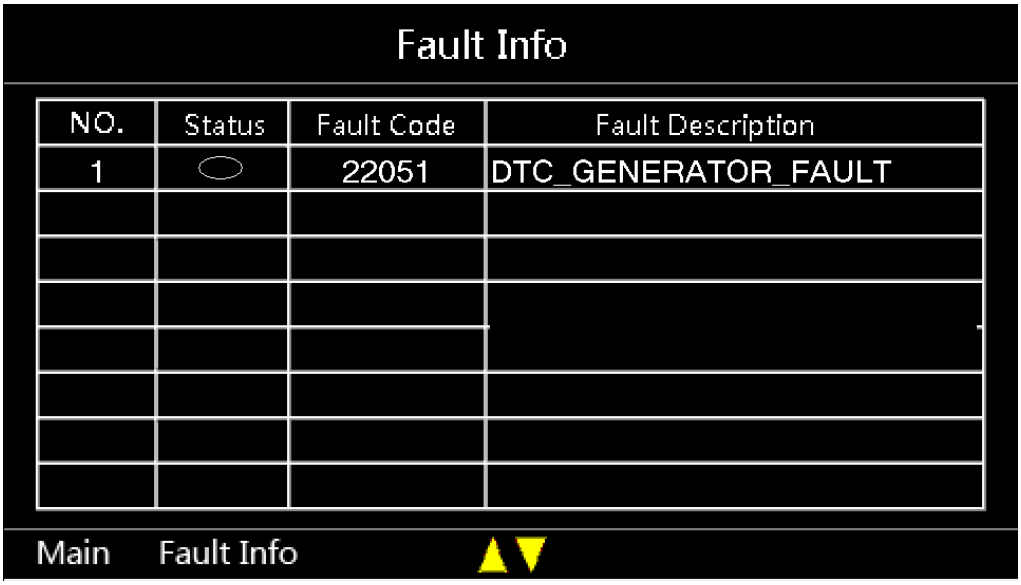

When certain states occur, the status indicator lights up and flashes; when the specific state is released, the turntable indicator light return to gray, as shown in the following figure:

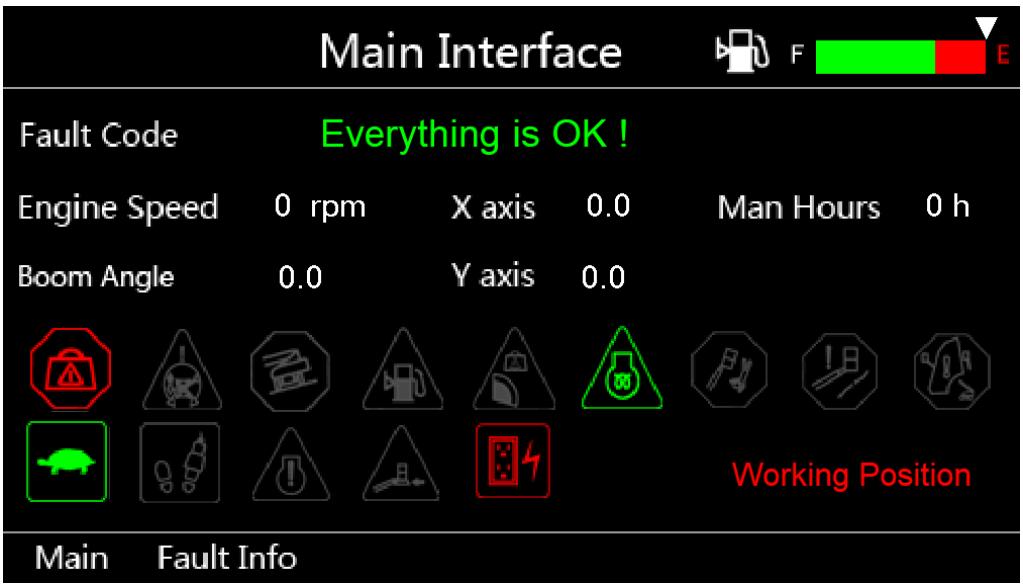

Figure 2-11

Main interface in the second generation display is as follows:

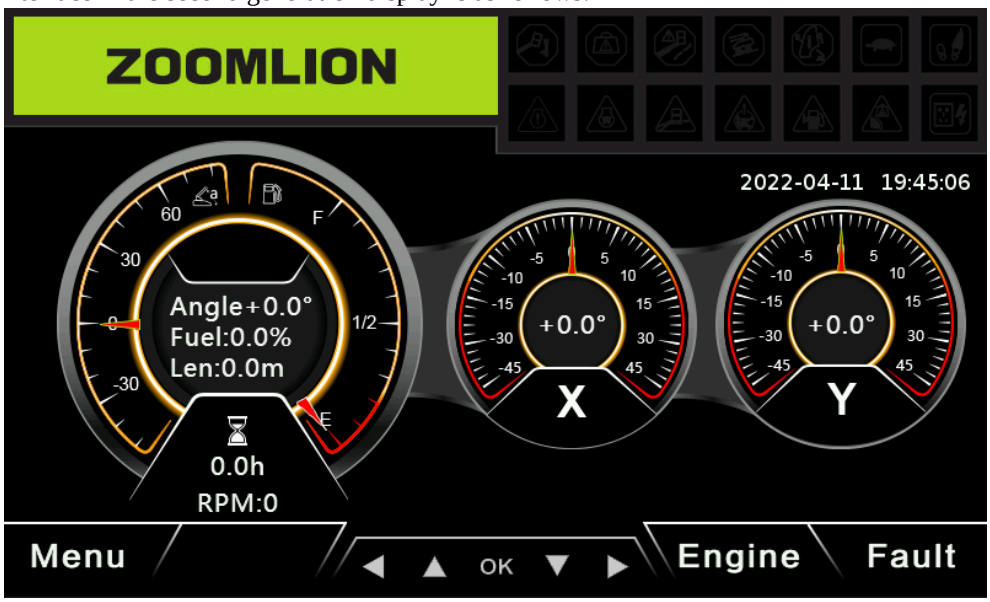

Figure 2-12

The function division is shown in the figure below.

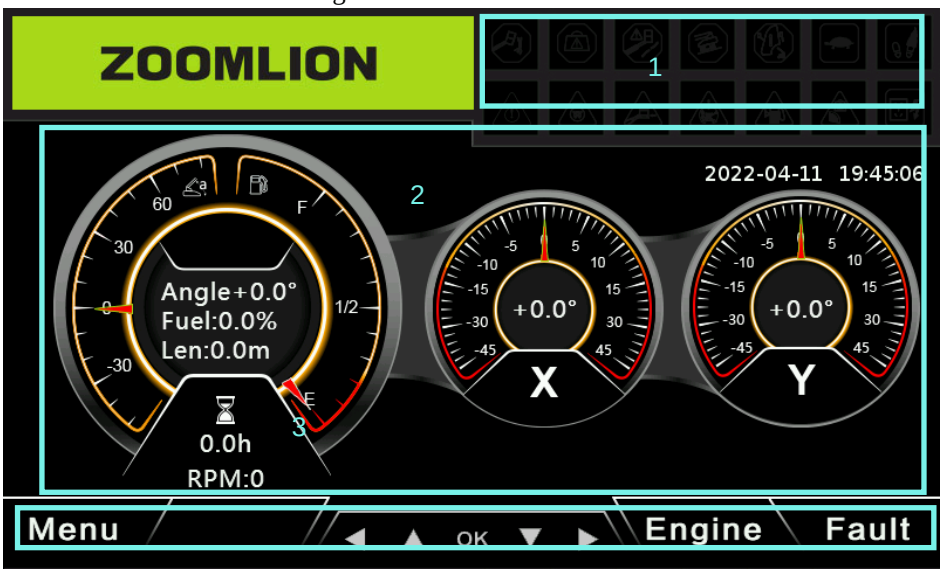

Figure 2-13

No.1 Indicator display column; No.2 Dynamic parameters monitoring column; No.3 Navigation bar.

1） When some specific status occurs, the status indicator lights up; when the specific status is released, the turntable indicator disappears;

2） The parameters of the machine are displayed in the dynamic parameter monitoring column in real time, the engine speed and body status of the equipment can be monitored;

3） Other detailed information and fault query can be entered through the corresponding key operation in the navigation bar.

When the engine fails, the "engine" indicator will start to flash. In this case, press the engine button to enter the engine page, and you can view the engine's fault code in real time, which is convenient for troubleshooting. Its display interface is shown in the figure below. After the engine fault is eliminated, the engine fault indicator stops flashing.

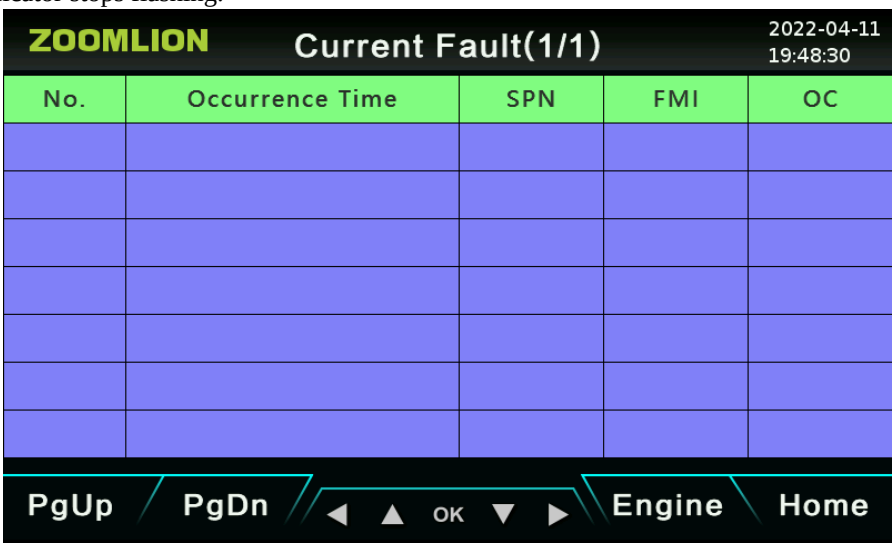

Figure 2-14

When a system alarm occurs on the aerial work platform, the "fault query" in the navigation bar will start to flash. In this case, press the fault query button to view the fault code in real time, which is convenient for troubleshooting. Its display interface is shown in the figure below. After troubleshooting, the fault query indicator stops flashing.

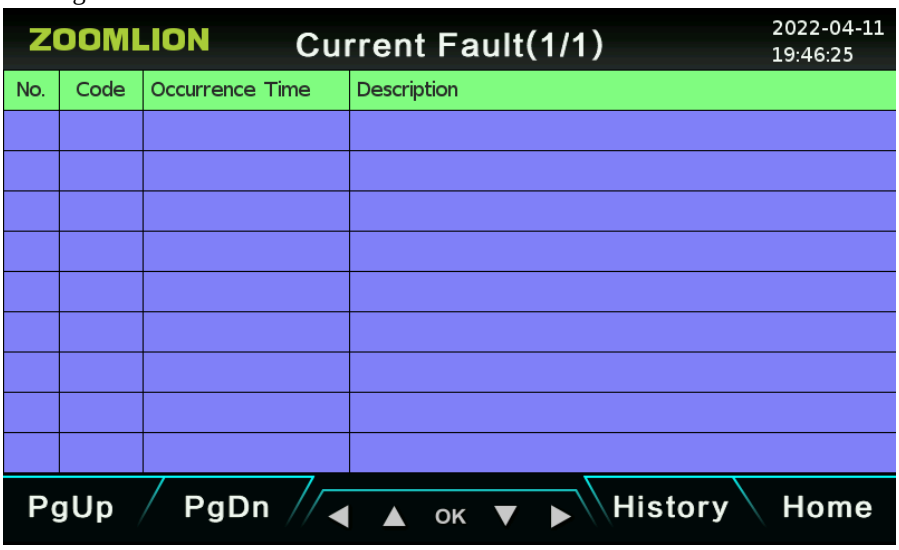

Figure 2-15

2.2.3 Platform control console

Avoid serious injury, do not operate machine if any control levers or toggle switches controlling platform movement do not return to the off or neutral position when released.

Figure 2-12 Platform control panel (Only the switch number corresponding to the existing function is identified.)

Table 2-3 Platform control panel instruction

No.	Name
1	Drive select switch
2	Platform leveling switch
3	Horn switch
4	Power/Emergency stop switch
5	Engine start/Auxiliary power switch
6	Drive direction confirm switch
7	Drive/Steer controller
8	Main boom telescope switch
9	Jib lift switch
10	Platform rotate switch
11	Work light switch
12	Function speed control
13	Main Lift/Swing Controller
14	Tower boom lift switch

WARNING

Avoid serious injury, do not operate machine if any control levers or toggle switches controlling platform movement do not return to the off or neutral position when released.

1) Drive select switch

Provides high speed, and low speed.

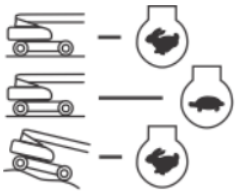

a) The forward position gives maximum drive speed;

b) The downward position gives maximum drive torque for rugged terrain or climbing condition;

c) The center position allows the machine to be driven in turtle speed.

Only use the platform leveling override function for slight leveling of the platform when platform is lowered. Incorrect use could cause the load/occupants to shift or fall. Failure to do so could result in death or serious injury.

2) Platform leveling switch

Provide platform leveling controls.This switch is use to adjust platform level in situations such as ascending/descending a grade.

3) Horn switch

Horn positioned in turntable sounds when pressed the switch.

4) Power/Emergency stop switch

Push in the platform red Emergency Stop button to the off position;Power is shut off to the platform functions.when pull out (on), power turns on to the platform functions.

5) Engine start/Auxiliary power switch

When pushed forward, the switch energizes the starter motor to start the engine.

Shut off engine and push the switch backward to start auxiliary pump. The auxiliary Pump provides sufficient power to lower the machine if the main pump or engine fails.

6) Drive direction confirm switch

When the boom is swung over the rear tires or further in either direction, the Drive Orientation indicator will illuminate when the drive function is selected. Push and release the switch, and within 5 seconds move the Drive/Steer control to activate drive or steer.Before driving, locate the blue/yellow orientation arrows on both the chassis and the platform controls.

Move the drive controls in a direction matching the directional arrows.

7) Drive/Steer controller

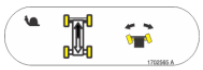

Provides drive/steer controls.

Push forward to drive forward, pull back to drive in reverse.

Steering is accomplished via a thumb-activated rocker switch on the end of the steer handle.

8) Main boom telescope switch

Provide extension and retraction of the main boom.

9) Jib lift switch

Provide raising and lowering of the jib.

10) Platform rotate switch

Provides platform rotate controls

11) Work light switch

This switch operates the chassis lights if machine is so equipped.

12) Function speed control

This control could adjust the main boom telescoping, tower boom or jib lifting, and the speed of platform rotation. The speed of jib lift and platform rotation speed can only be controlled by the function speed knob. The speed of the turn, turntable rotation and main boom lift can be switched between turtle speed and rabbit speed.

Turning the knob all the way counterclockwise until it clicks to put drive, main lift and swing into creep mode.

13) Main Lift/Swing Controller

Provides main boom lift and platform swing. Push forward to lift up, pull backward to lower.

Move left to swing clockwise, move right to swing counterclockwise.

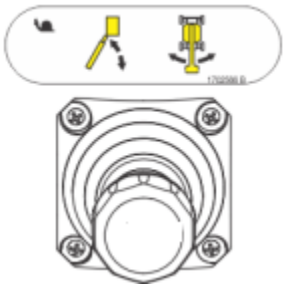

14) Tower boom lift switch

Provides for raising and lowering of tower boom when positioned up or down.

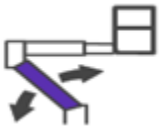

2.2.4 Platform control indicator panel

Note:The indicator lights will illuminate for approximately 1 second when the key is positioned to the on position to act as a self test.

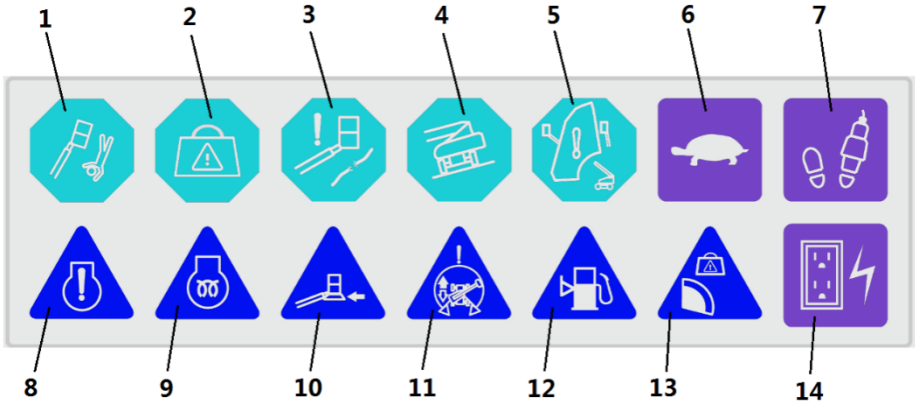

Figure 2-13 Platform Control Indicator Panel

Table 2-4 Platform Indicator Panel Instruction

No.	Name
1	Leveling system fault indicator
2	Platform overload indicator
3	Wire rope loosen indicator
4	Tilt Alarm Warning Light
5	Main boom system fault indicator
6	Creep Speed Indicator
7	Footswitch indicator
8	System fault indicator
9	Glow plug
10	Soft touch indicator
11	Drive direction confirm indicator
12	Low level fuel indicator
13	Limited position indicator
14	AC generator indicator

1) Leveling system fault indicator (This model is mechanically leveled).

Indicates faults in electronic leveling system. Indicator will flash, and alarm will sound. If boom is lifted, creep mode is automatically activated.

WARNING

If leveling system fault indicator lights up, shut off the machine and restart. If fault occurs again,

retract the platform to stowed position via manual level function, and service the leveling system.

2) Platform overload indicator.

Indicates the platform has been overloaded.

3) Wire rope loosen indicator (not equipped).

Indicates loosen or damage of main boom wire rope, service or adjust it immediately.

4) Tilt Alarm Warning Light.

This illuminator indicates that the chassis is on a slope.

As long as the tilt angle of the chassis exceeds 5 °, the tilt alarm indicator will flash and a tilt alarm will sound.

If tilt alarm sounds in stowed position, creep mode is automatically activated.

If tile alarm sounds in working position, disable drive, steer and telescope functions, creep mode is automatically activated.

WARNING

If the tilt alarm sounds with the platform uphill, proceed as follows:

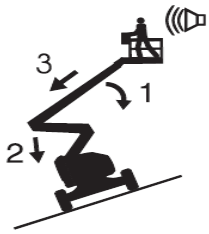

a) Lower the main boom;

b) Lower the tower boom;

c) Retract the main boom.

If the tilt alarm sounds with the platform downhill, proceed as follows:

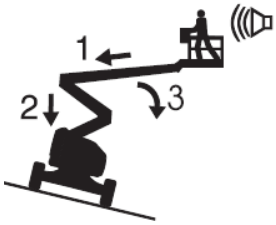

a) Retract the main boom.

b) Lower the tower boom;

c) Lower the main boom.

5) Main boom system fault indicator (not equipped).

Indicates that the length of main boom cannot measure, need check boom length sensor.

6) Creep speed indicator.

When the Function Speed Control is turned to the creep position, the indicator acts as a reminder that all functions are set to slowest speed.

The light will be on continuously if the operator selects creep speed.

7) Foot switch indicator.

To operate any function, the foot switch must be depressed and the function selected with 7 seconds. The enable indicator shows that the controls are enabled.

If a function is not selected within seven seconds, or if a seven second lapse between ending one function and beginning the next function, the enable light will go out and the foot switch must be released and depressed again to enable the controls. Releasing the foot switch stops all platform controls.

To avoid serious injury, do not remove, modify or disable the footswitch by blocking or any other means. Foot switch must be adjusted if malfunctions occur.

8) System fault indicator.

Indicates system faults.

9) Glow plug indicator.

Indicates the glow plugs are operating.
Start engine until glow plug light goes out.

10) Soft touch indicator.

If light goes on, soft touch function activates,

11) Drive direction confirm indicator.

When the boom is swung over the rear tires or further in either direction, the Drive Orientation indicator will illuminate when the drive function is selected.

This is a signal for the operator to verify that the drive control is being operated in the proper direction (i.e. controls reversed situations).

12) Low fuel indicator.

Indicates a low fuel condition in the tank.

13) Limited position indicator.

Indicates limited position of boom.

14) Limited position indicator.

Indicates limited position of boom.

2.2.5 Safety device

The anti-crushing device is installed on the armrest at the platform console to avoid unobserved crushing injuries encountered during the operation of the equipment.

Figure 2-18

When the equipment is running, the operator is squeezed from the back or above, passively pushing the anti-crushing device forward and triggering the internal detection switch. At this time, the equipment will stop the current action and move in the opposite direction briefly, avoiding the operator being squeezed.

WARNING

To avoid serious personal injury or death, do not disassemble, modify or disable the anti-extrusion device in any way.

WARNING

Before operation, check the work area the work area for obstacles or other possible dangers overhead or behind.

ZOOMLION

Operation and Safety Manual

Section 3 Machine Inspection

Section 3 MACHINE INSPECTION

3.1 General

DANGER

An operator must not operate the machine, only if:

He has learned and practiced the principles of safe machine operation contained in this operational manual.

a) Only use the machine as it was intended;
b) Know and understand the pre-operation inspection before going on to the next section;
c) Implement functional test before operating the machine at all times;
d) Inspect job site;
e) Only use the machine as it was intended.

3.1.1 Pre-Start inspection principle

a) It is the responsibility of the operator to perform a pre-operation inspection and routine maintenance;
b) The pre-operation inspection is a visual inspection performed by the operator prior to each work shift. The inspection is designed to discover if anything is apparently wrong with a machine before the operator performs the function tests;
c) The pre-operation inspection also serves to determine if routine maintenance procedures are required. Only routine maintenance items specified in this manual may be performed by the operator;
d) Refer to the list on the next page and check each of the items;
e) If damage or any unauthorized variation from factory delivered condition is discovered, the machine must be tagged and removed from service;
f) Repairs to the machine may only be made by a qualified service technician, according to the manufacturer's specifications. After repairs are completed, the operator must perform a pre-operation inspection again before going on to the function tests;
g) Scheduled maintenance inspections shall be performed by qualified service technicians, according to the manufacturer's specifications and the requirements listed in the responsibilities manual.

3.1.2 Pre-Start inspection

a) Be sure operator's, safety, and responsibilities manuals are complete, legible, and in the storage container located on the machine;
b) Be sure all decals are in place and legible. See Inspections section;
c) Check for hydraulic oil leaks and proper oil level. Add oil if needed. See Maintenance section;

d) Check for engine oil leak and proper fluid level. Add oil if needed. See Maintenance section;

e) Check for engine coolant leak and proper level of coolant. Add coolant if needed. See Maintenance section;

f) Check the following components or areas for damage, improperly installed, or missing parts and unauthorized modifications:

1) Electrical components, wiring, and electrical cables;
2) Hydraulic hoses, fittings, cylinders, and manifolds;
3) Hydraulic tank;
4) Drive motor, reducer;
5) Motor driver;
6) Wear pads;
7) Tires and wheels;
8) Limited switch and horn;
9) Alarm and indicator (if equipped);
10) Nuts, bolts and other fasteners;
11) Platform entry mid-rail or gate;
12) Platform load cell;
13) Lanyard anchorage points;
14) Check entire machine for:
    ① Cracks in welds or structural components;
    ② Dents or damage to machine;
    ③ Excessive rust, corrosion or oxidation.

g) Be sure that all structural and other critical components are present and all associated fasteners and pins are in place and properly tightened;

h) Be sure that engine tray is locked and check if the battery connecting properly;

i) After you complete your inspection, be sure that all covers are in place and latched.

3.2 Function Test

3.2.1 Function test principle

a) The function tests are designed to discover any malfunctions before the machine is put into service. The operator must follow the step-by-step instructions to test all machine functions;

b) A malfunctioning machine must never be used. If malfunctions are discovered, the machine must be tagged and removed from service. Repairs to the machine may only be made by a qualified service technician, according to the manufacturer's specifications;

c) After repairs are completed, the operator must perform a pre-operation inspection again before putting the machine into service.

DANGER

An operator must not operate the machine, only if:

He has learned and practiced the principles of safe machine operation contained in this operational manual.

a) Avoid hazardous situations;

b) Perform a pre-operation inspection at all times;

c) Implement functional test before operating the machine at all times;

d) Inspect job site;

e) Only use the machine as it was intended.

3.2.2 Ground function check

a) Test Emergency Stop

1) Select a test area that is firm, level and free of obstruction;
2) Turn the key switch to ground control;
3) Pull out the red Emergency Stop button to the on position;
4) Check test result: The beacons should flash;
5) Start engine referring to Operation Instruction section;
6) Push in the platform red Emergency Stop button to the off position;

Check test result: Power off and no functions should operate.

b) Test machine functions

1) Turn the key switch to ground control, and start the engine;
2) Do not push and hold the function enable button;
3) Attempt to activate each boom and platform function button;

Check test result: no boom and platform functions should operate.

4) Turn the key switch to ground control, and start the engine;
5) Push and hold the function enable button and activate each boom and platform function button;

6) Attempt to activate each boom and platform function button.

Check test result: All boom and platform functions should operate through a full cycle.

c) Test auxiliary power

1) Start the engine at the ground controls;
2) Pull the red Power/Emergency Stop Switch button to on position;
3) Operate Auxiliary Power Switch;
4) Attempt to activate each boom and platform function button.

Test result: all boom and platform functions should operate through a full cycle.

3.2.3 Platform function check

a) Test Emergency Stop

1) Select a test area that is firm, level and free of obstruction;
2) Turn the key switch to platform control;
3) Pull out the red Emergency Stop button to the on position;
4) Start engine referring to Operation Instruction section;
5) Push in the platform red Emergency Stop button to the off position.

Check test result: Power off and no functions should operate.

b) Test the Foot Switch

1) Pull out the red Emergency Stop button to the on position;
2) Press down and held the foot switch;
3) Attempt to start the engine;

Result: the engine should not start.

4) Pull out the red Power / Emergency Stop switch on the platform to the on position;
5) Do not press down the foot switch;
6) Attempt to start the engine;

Result: no boom and platform functions should operate.

7) Select the platform mode with the key switch, and start the engine;
8) Do not press down the foot switch ;
9) Attempt to activate each boom and platform function button;

Result: all boom and platform functions should operate.

10) Start the engine at the platform controls;
11) Press down the foot switch and activate each boom and platform function button;
12) Attempt to activate each boom and platform function button;

Result: all boom and platform functions should operate at platform mode when foot switch is pressed down.

c) Test auxiliary power

1) Shut off the engine at the platform controls;
2) Pull out the red Emergency Stop button to the on position;
3) Operate Auxiliary Power switch;

4) Attempt to activate each boom and platform function button.

Result: all boom and platform functions except driving and steering should operate at the auxiliary power mode.

d) Test the Horn

Press the horn button at the platform controls.

Check test result: The horn should sound.

e) Test the Steering

1) Select Platform Mode;
2) Press down the foot switch and activate each boom and platform function button;
3) Move the steering handle;
4) Release the steering handle.

Check test result: the wheels should turn in the direction that the control handle operates. Release the steering handle, the steering function is disabled.

f) Test Drive and Braking

1) Select Platform Mode;
2) Press down the foot switch and activate each boom and platform function button;
3) Move the drive control handle.
4) Release the drive control handle.

Result: the machine should turn in the direction that the control handle operates. Release the drive handle, the drive function is disabled.

g) Test the Drive Enable System

1) Select Platform Mode;
2) Press down the foot switch and activate each boom and platform function button;
3) Rotate the turntable until the upper boom moves past a circle-end wheel;
4) Attempt to operate drive handle;

Check test result: the drive enable indicator light should come on while the upper boom is anywhere outside of the range shown. The drive function should not operate.

5) Move the drive enable toggle switch;
6) Attempt to operate drive handle.

Check test result: move the drive enable toggle switch and drive in low speed.

h) Test Limited Drive Speed

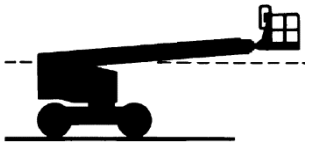

1) Select Platform Mode;
2) Press down the foot switch and activate each boom and platform function button;
3) Raise the upper boom to 15° above horizontal;
4) Attempt to operate drive handle;

Check test result: the drive speed should switch to low speed with the upper boom raised.

5) Lower the upper boom to stowed position;
6) Extend the upper boom 0.5m;
7) Attempt to operate drive handle;

Check test result: the drive speed should switch to low speed with the upper boom extended.

8) Lower the upper boom to stowed position;
9) Attempt to operate drive handle.

Check test result: the drive speed should switch to high speed with the upper boom retracted to stowed position.

i) Test anti-crushing device

1) Strat the engine in Platform mode;
2) Step “footswitch” and maintain enabled state;
3) Extend the main boom;
4) Push forward the anti-crushing device when boom extending.

Test result: main boom stops extending and retracts for a certain distance.

3.3 Workplace Inspection

DANGER

An operator must not operate the machine, only if:

He has learned and practiced the principles of safe machine operation contained in this operational manual.

a) Avoid hazardous situations;
b) Perform a pre-operation inspection at all times;
c) Implement functional test before operating the machine at all times;
d) Inspect job site;
e) Know and understand the workplace inspection before going on to the next section;
f) Only use the machine as it was intended.

3.3.1 Workplace inspection principle

The workplace inspection helps the operator determine if the workplace is suitable for safe machine operation. It should be performed by the operator prior to moving the machine to the workplace.

It is the operator's responsibility to read and remember the workplace hazards, then watch for and avoid them while moving, setting up, and operating the machine.

3.3.2 Workplace inspection

Be aware of and avoid the following hazardous situations:

a) Drop-offs or holes;

b) bumps, floor obstructions, or debris;
c) Sloped surfaces;
d) Unstable or slippery surfaces;
e) Overhead obstructions and high voltage conductors;
f) Hazardous locations;
g) Inadequate surface support to withstand all load forces imposed by the machine;
h) Wind and weather conditions;
i) The presence of unauthorized personnel;
j) Other possible unsafe condition.

3.4 Decal Inspection

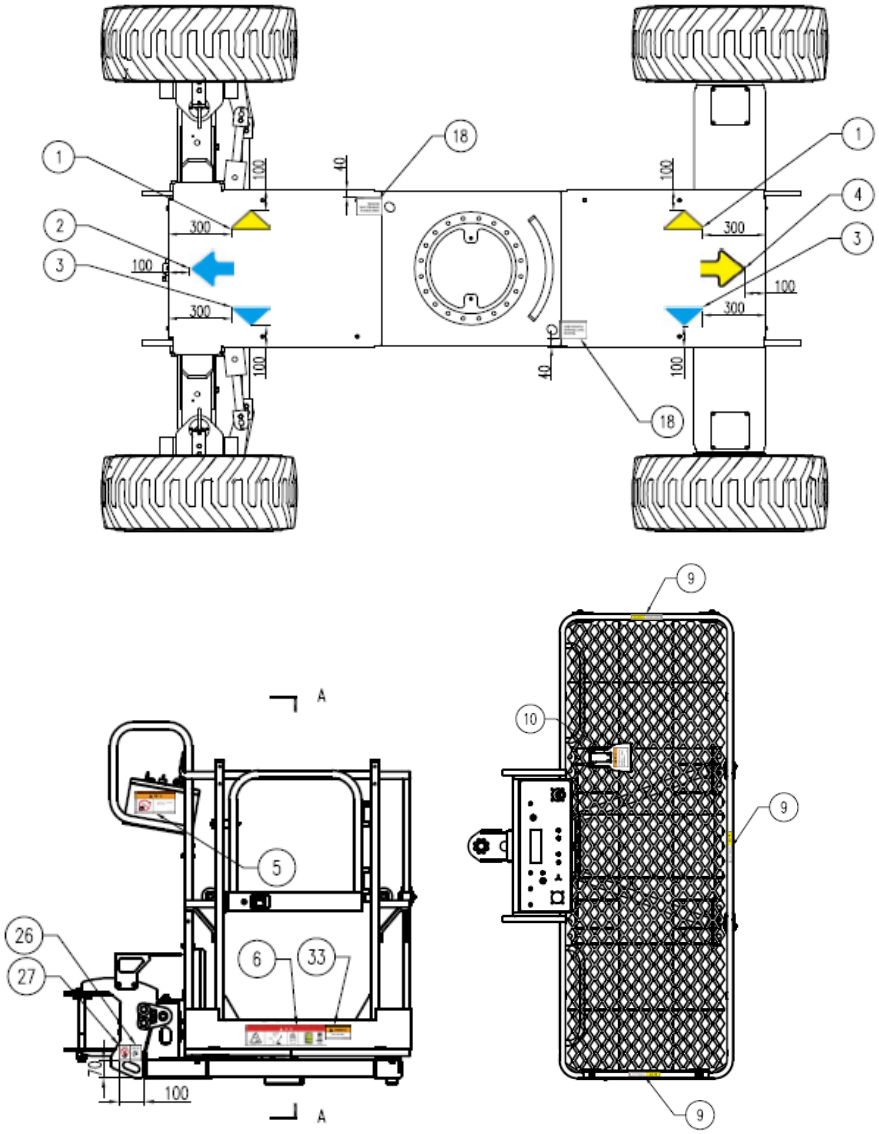

Figure 3-1 Decal position

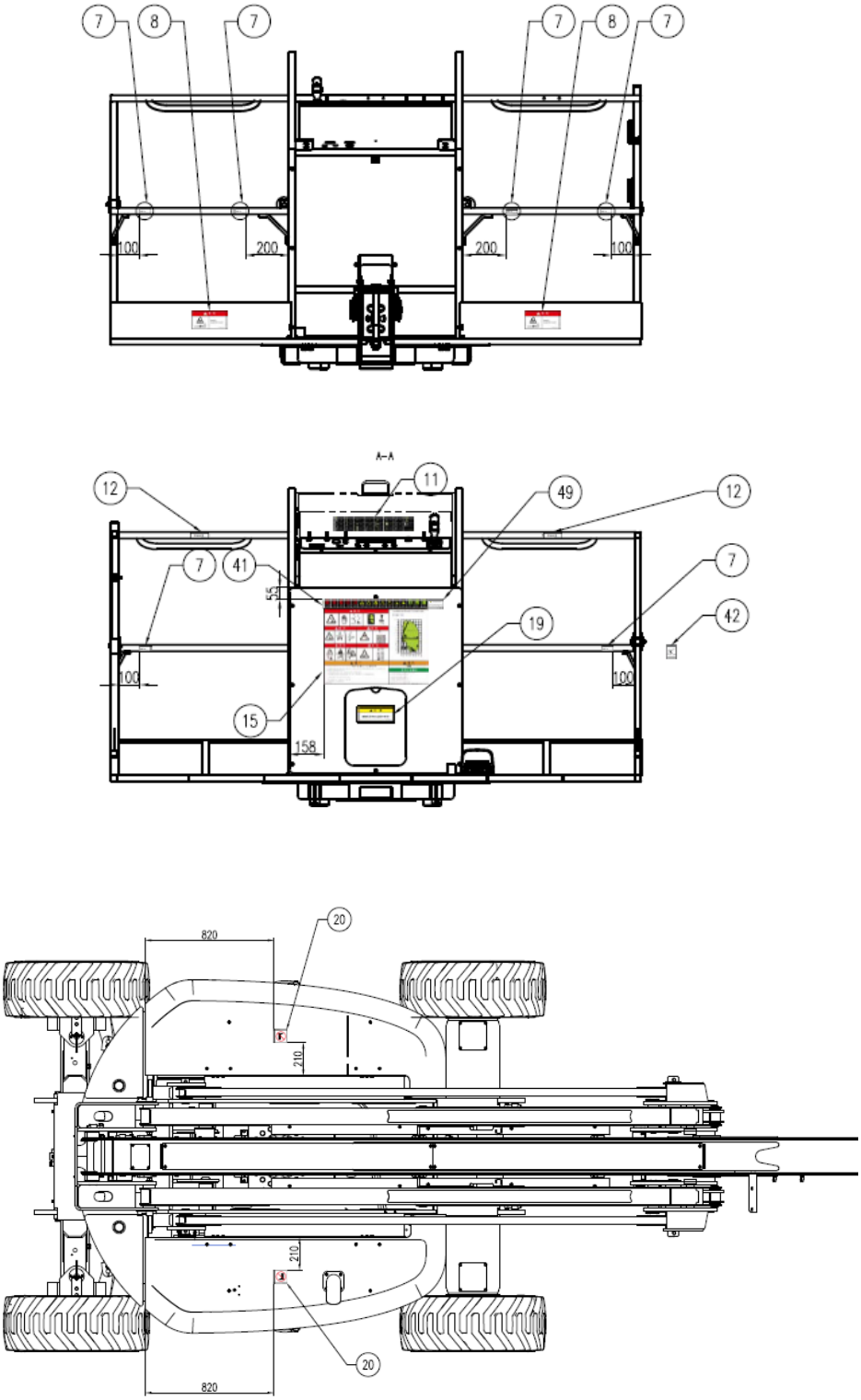

Figure 3-1 Decal position (continuous)

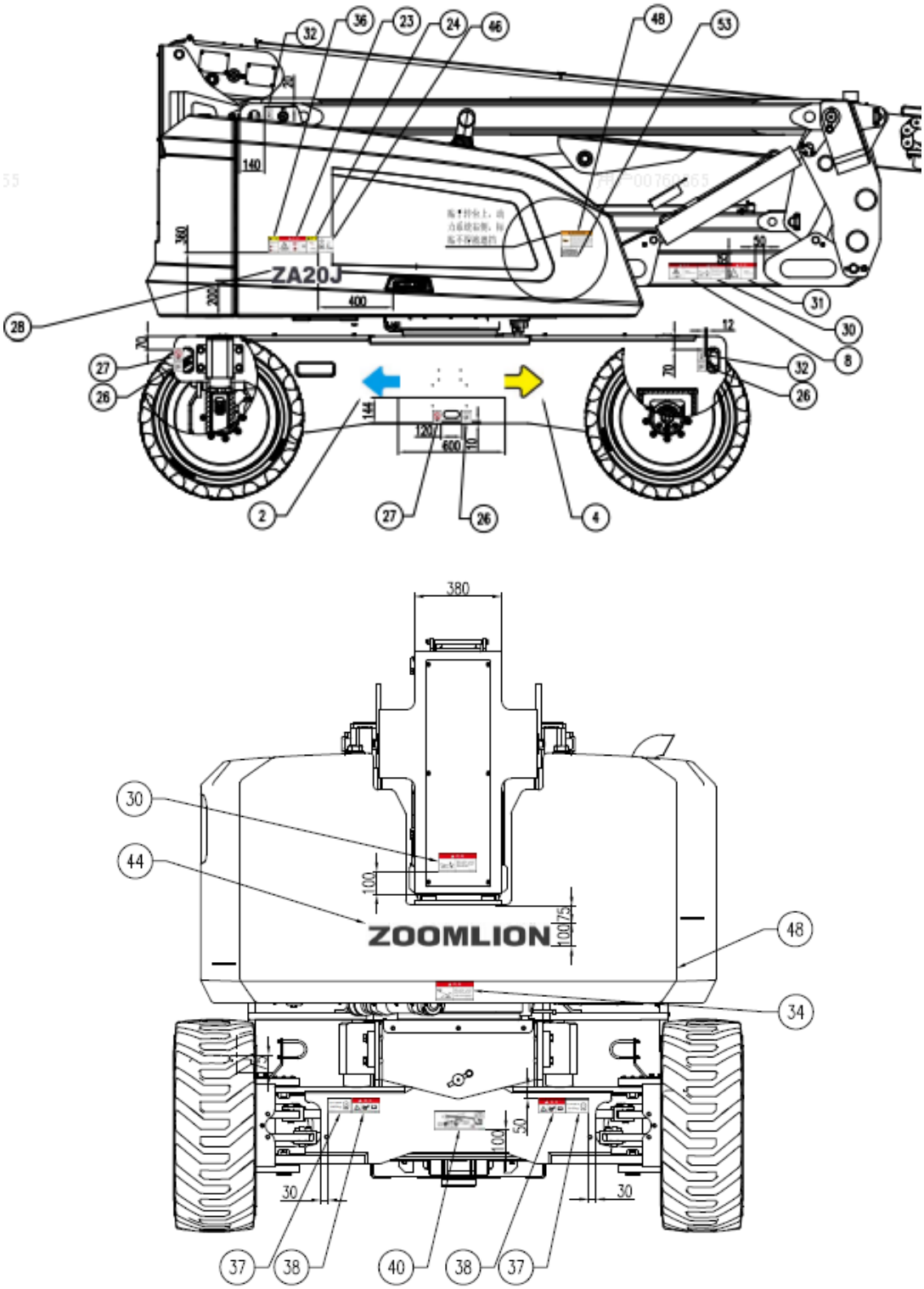

Figure 3-1 Decal position (continuous)

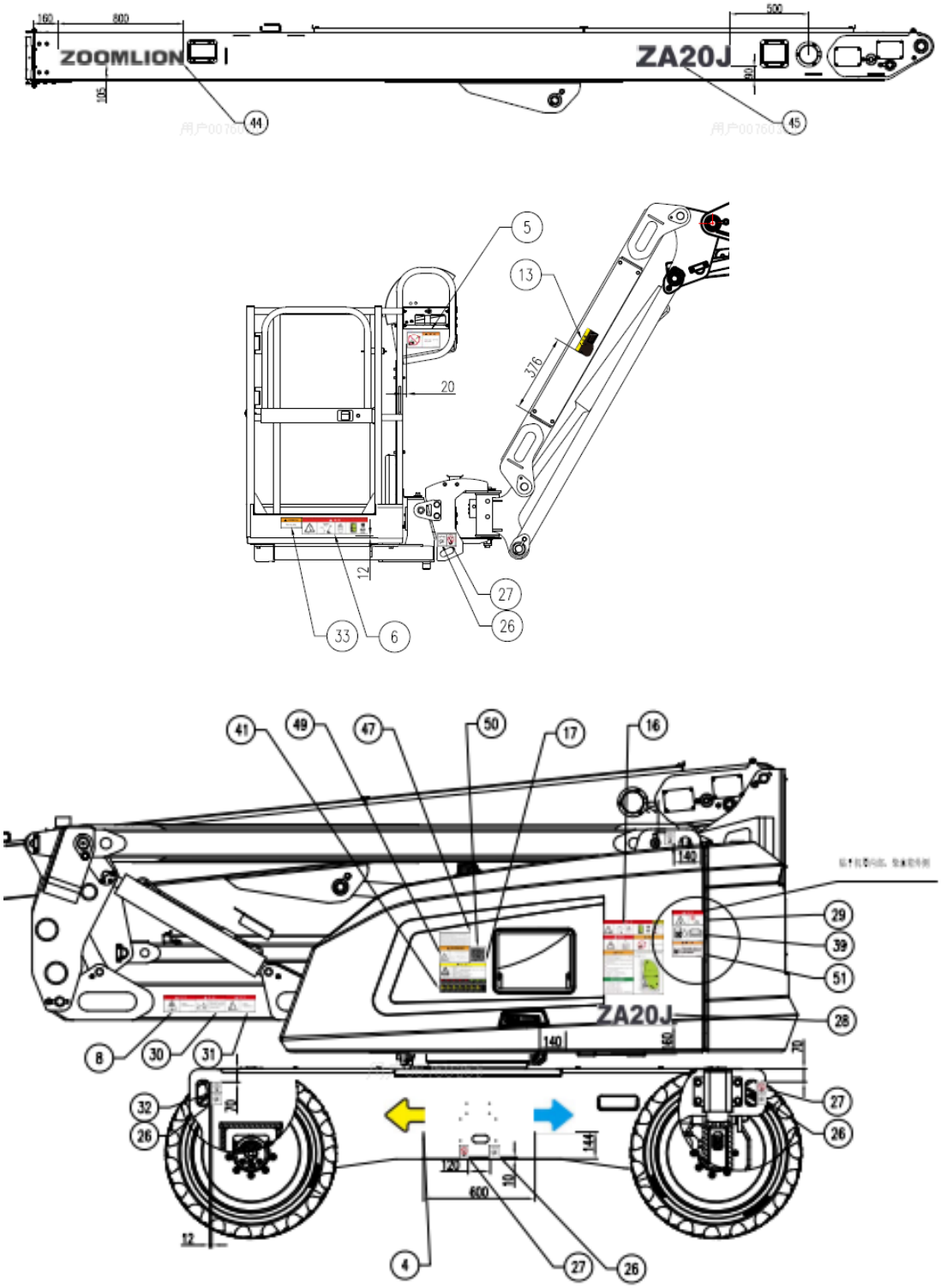

Figure 3-1 Decal position (continuous)

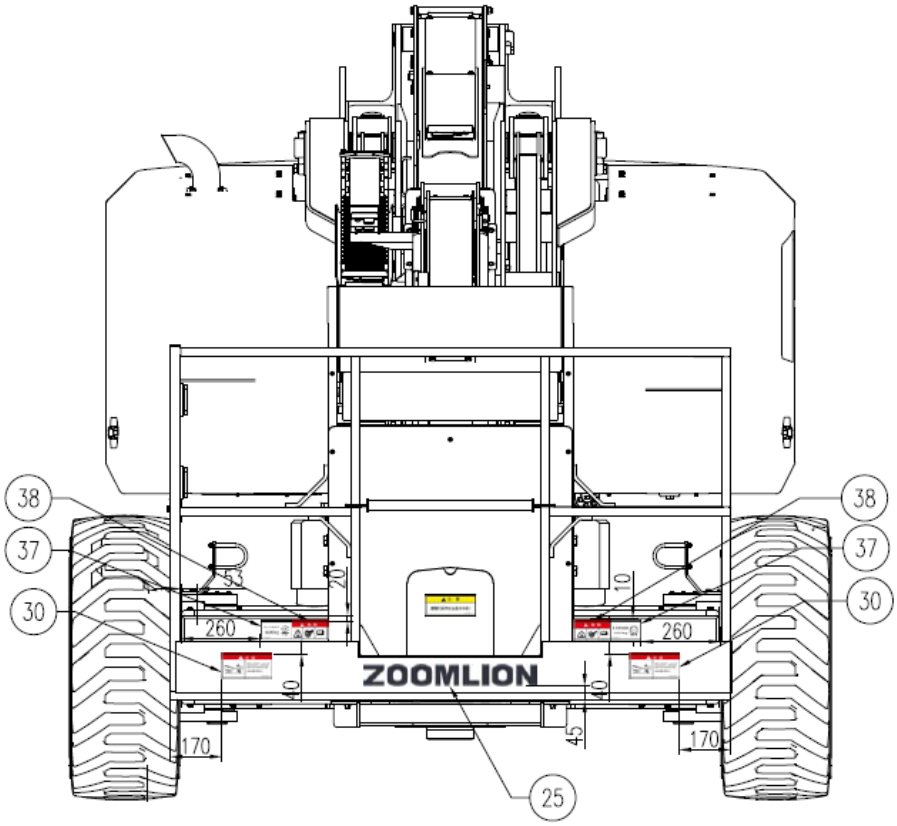

Figure 3-1 Decal position (continuous)

Use the pictures on next page to verify that all decals are legible and in place.

Below is a numerical list with quantities and descriptions.

Table 3-1 Decal

Numbers are corresponded to the decal (not all decal are pasted on the machine)

No.	Part. No/Description	Qty	Decal
1	00771407000201100 Label- Yellow triangle	2	
2	00771407000201080 Label- Blue arrow	3	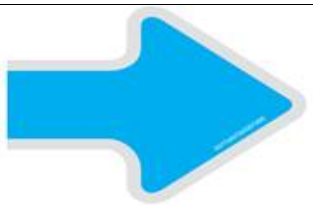
3	00771407000201110 Label- Blue triangle	2	
4	00771407000201090 Label- Yellow arrow	3	
5	00773407000401271 Warn- Prohibit high pressure water-bleakest	2	
6	02564707020401050 Hazard- Tip-over Hazard	2	
7	00773407000201411 Label- Lanyard Anchorage Point	6	

Table 3-1 Decal (continuous)

Numbers are corresponded to the decal (not all decal are pasted on the machine)

No.	Part. No/Description	Qty	Decal
8	00773407000401321 Warn- Crushing hazard II	4	
9	00773407000401201 Caution- Prohibit Lanyard	3	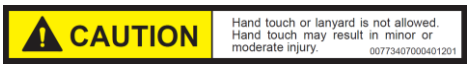
10	00773407000401231 Warn- Foot Switch Malfunction	1	
11	00773407000401141 Label- Platform Console Instruction	1	
12	00773407010401021 Label-Handrail position	2	
13	00773407010401021 Caution-Risk of Pinching Hand	2	

Table 3-1 Decal (continuous)

Numbers are corresponded to the decal (not all decal are pasted on the machine)

No.	Part. No/Description	Qty	Decal
14	00773407000401221 Label- Platform Indicator Panel Instruction	1	
15	02564707020401330 Label- Work Platform	1	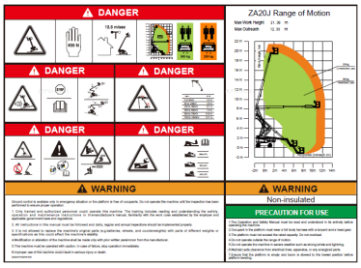
16	02564707020401530 Label-Hood	1	
17	00773407000401511 Caution-Cold starting	1	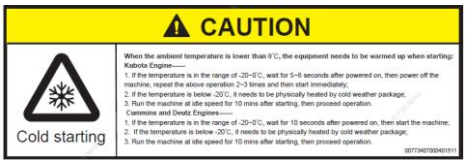
18	00773407000401251 Label-Plug stop pin when transporting	2	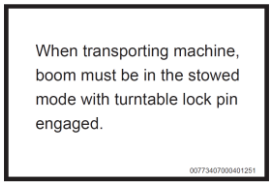
19	00773407000401391 Caution-Preserve the manual	1	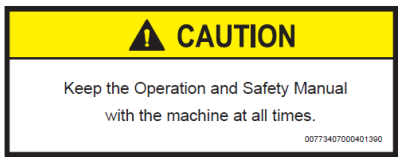

Table 3-1 Decal (continuous)

Numbers are corresponded to the decal (not all decal are pasted on the machine)

No.	Part. No/Description	Qty	Decal
20	00773407000201181	2	
	Label- Prohibit Step on		
21	00773707000201101	1	
	Label- Minimum fuel level		
22	00773707000201111	1	
	Label- Maximum fuel level		
23	00773407000401381	1	
	Danger- Explosion Hazard II		
24	00773407000401151	1	
	Caution- Cut off Battery		
25	00773407000201010	1	ZOOMLION
	Label-Zoomlion LOGO I		
26	00773407000201421	8	
	Label- Tie down point		

Table 3-1 Decal (continuous)

Numbers are corresponded to the decal (not all decal are pasted on the machine)

No.	Part. No/Description	Qty	Decal
27	00773407000201241 Label- Prohibit Lifting	6	
28	00773707020401020 Model LOGO I	2	ZA20J
29	00773707000401371 Nameplate	1	
30	00773407000401191 Danger- Crushing Hazard	5	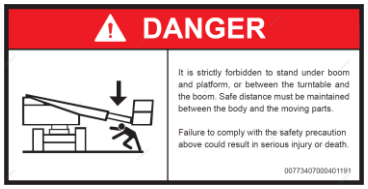
31	00773407000401311 Danger- Tip-over Hazard II	2	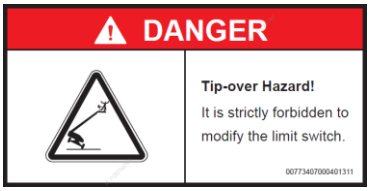
32	00773407000201431 Label- Lift point	4	
33	00775607000401321 Warn-Non-insulated	2	

Table 3-1 Decal (continuous)

Numbers are corresponded to the decal (not all decal are pasted on the machine)

No.	Part. No/Description	Qty	Decal
34	00773407000401211 Danger- Crushing Hazard	1	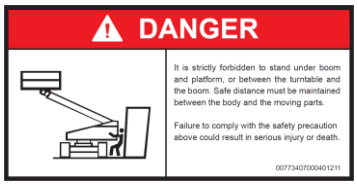
35	00773407000401471 Hazard-Burn	1	
36	00773407010401441 Caution- Main Power Operating Instruction	1	
37	00773707030401051 Label- Wheel Load	4	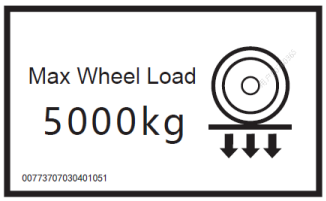
38	00773407000401561 Danger- Tip-over Hazard III	4	
39	00773407000201061 Follow instructions to refuel	1	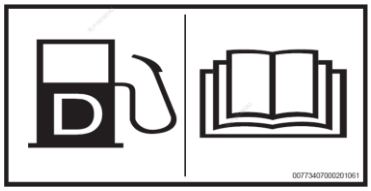
40	02564707020401060 Label- Transport and Lift Instruction	1	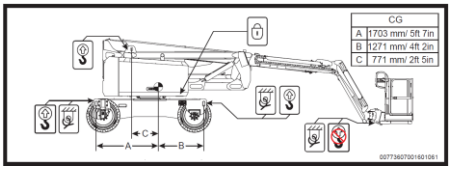

Table 3-1 Decal (continuous)

Numbers are corresponded to the decal (not all decal are pasted on the machine)

No.	Part. No/Description	Qty	Decal
41	00773407000401081 Label- Platform Indicator Panel Instruction	1	
42	00773407000401461 Label-Platform AC power	1	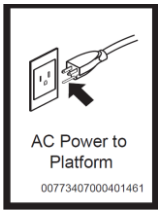
43	00773407000401171 Hazard-Prohibit contact	1	
44	00773407000201030 Label-Zoomlion LOGO III	1	ZOOMLION
45	00773707020401030 Label- Model LOGO-II	1	ZA20J

Table 3-1 Decal (continuous)

Numbers are corresponded to the decal (not all decal are pasted on the machine)

No.	Part. No/Description	Qty	Decal
46	00771107000201250	1	
	Label-Noise		
47	00771407000401191	1	
	QR code		

ZOOMLION

Operation and Safety Manual

Section 4 Operation Instruction

SECTION 4 OPERATION INSTRUCTION

4.1 General

DANGER

An operator must not operate the machine, only if:

He has learned and practiced the principles of safe machine operation contained in this operational manual.

a) Avoid hazardous situations;
b) Perform a pre-operation inspection at all times;
c) Implement functional test before operating the machine at all times;
d) Inspect job site;
e) Only use the machine as it was intended.

Fundamentals:

The Operating Instructions section provides instructions for each aspect of machine operation. It is the operator's responsibility to follow all the safety rules and instructions in the operator's,safety and responsibilities manuals.

Using the machine for anything other than lifting personnel, along with their tools and materials, to an aerial work site is unsafe and dangerous.

Only trained and authorized personnel should be permitted to operate a machine. If more than one operator is expected to use a machine at different times in the same work shift, they must all be qualified operators and are all expected to follow all safety rules and instructions in the operator's, safety and responsibilities manuals. That means every new operator should perform a pre-operation inspection, function tests, and a workplace inspection before using the machine.

4.2 Machine Operation

4.2.1 Engine operation

Note:

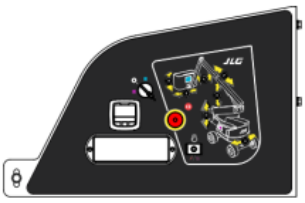

a) Initial starting should always be performed from the Ground Control station;
b) When operating a machine at high altitudes, a decrease in machine performance may occur due to a decrease in air density. When operating a machine at high ambient temperatures, a decrease in machine performance and increase in engine coolant temperature may occur;

c) Foot switch must be released (up) position before starter will operate. If starter operates with foot switch in the depressed position, DO NOT operate machine;

d) If an engine malfunction causes a unscheduled shutdown, determine the cause and correct it before restarting the engine;

e) Consult ZOOMLION customer service to know more about the operation under abnormal conditions.

4.2.1.1 Engine start

WARNING

Machine with diesel engines. After turning on ignition, operation must wait until glow plug indicator light goes out before cranking engine.

a) Turn the platform/ground select switch to Ground position;

b) Pull the Power/Emergency switch to On position;

c) Toggle the Engine Start switch until engine starts;

d) After the engine is warmed up enough, push the Power / Emergency stop switch and turn off the engine;

e) Turn the Platform/Ground select switch to Platform position;

f) Pull out the Power/Emergency Stop switch on platform, and power the platform;

g) Toggle the Engine Start switch until engine starts.

CAUTION

Allow engine to warm up for a few minutes at low speed before applying any load.

If engine fails to start promptly, do not crank for an extended period. If engine fail to start again, allow engine motor to cool off for 2-3 minutes. If engine fails after several attempts, refer to engine maintenance manual.

4.2.1.2 Engine shut down sequence

a) Remove all load and allow engine to operate at low speed for 3-5 minutes. This allows further reduction of internal engine temperature;

b) Push in Power/Emergency Stop switch;

c) Turn the Platform/Ground select switch to Off position. Refer to Engine Manufacture's manual for detailed information.

4.2.2 Drive operation

Traveling is limited by two factors:

a) Gradeability, which is the percent of grade of the incline the machine can climb;

b) Side slope, which is angle of the slope the machine can be driven across.

Note: identify the allowable range of slope and side slope rating. All ratings for Gradeability and side slope are based upon the machine's upper boom being in the stowed position, fully lowered and retracted.

WARNING

DO NOT drive with upper boom lifted above the horizontal position except on a smooth, firm and level surface.

To avoid loss pf travel control or upset on grades and side slopes, do not drive machine on grades or side slopes exceeding those specified on machine nameplate.

DO NOT drive on side slopes which exceed 5 degrees with platform elevated, do not drive on side slopes which exceed 24 degrees in stowed position.

The user should confirm the control of driving direction before driving.

Be extreme caution when driving in reverse and at all times when driving with platform elevated.

4.2.2.1Traveling forward and reverse

a) At Platform Controls, pull out Emergency Stop switch, start the engine, and activate foot switch;

b) Position DRIVE/STEER control to “FORWARD” OR “REVERSE” hold for duration of forward or reverse travel desired.

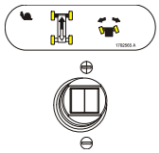

This machine is equipped with travelling direction indicator lights. The indicator lights on platform console to inform that upper boom is over front axle (steer wheels), steer and drive controls will move in opposite direction than indicated on machine placards.

If the indicator is illuminated, operate the Drive function in the following manner:

a) Check blue and yellow arrow on platform control panel and on chassis match or not, confirm the travelling direction.

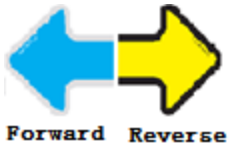

b) Toggle and loosen travelling direction confirmation switch.Operate the handle to drive as needed within 5 seconds.

4.2.2.2 Steering

a) At Platform Controls, pull out Emergency Stop switch and activate foot switch;

b) Position the traveling/steering handle to the left or right side to turn wheel left or right, accordingly;

c) Turn the steering / steering handle to the right to operate the wheels to the right.

4.2.3 Platform leveling

Only use the platform leveling function for slight leveling of the platform when the platform is in low position.

Incorrect use could cause the load/occupants to shift or fall. Failure to do so could result in death or serious injury.

Before platform level adjustment, identify the position of the platform.

To Level Up or Down –Position the platform/Level control switch Up or Down and hold until the platform is level.

4.2.4 Platform rotation

To rotate the platform to the left or right, use the Platform Rotate control switch to select the direction and hold until desired position is reached.

WARNING

Do not swing or raise upper boom above horizontal position when machine is out of level.

Do not use the tilt alarm as a level indicator for the chassis.

To avoid tip over, lower platform to ground level. Then drive machine to a level surface before raising upper boom.

To avoid serious injury, do not operate machine if any control lever or toggle switch controlling platform movement does not return to the Off or neutral position when released.

If the platform does not stop when a control switch or lever is released, remove foot from the foot switch or use emergency stop switch to stop the machine.

4.2.5 Turntable slewing

CAUTION

When swinging the turntable make sure the upper boom is adequately away from the surrounding walls, obstacles, and any equipment.

Move the control handle on the platform or the control switch on ground to the "Left" or "Right" and the turntable will rotate left or right.

4.2.6 Upper boom lift

To raise or lower the upper boom, move the lifting handle on the platform or position the Upper Boom Lift on ground to UP or DOWN until the desired height is reached.

4.2.7 Telescoping the upper boom

Move the telescoping switch to EXTEND or RETRACT position, the upper boom could extend or retract.

4.2.8 Raising and lowering the tower boom

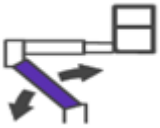

To raise or lower the tower boom, position the Tower Boom Lift to Up or Down until the desired height is reached.

4.2.9 Raising and lowering the jib

To raise or lower the Jib, position the Jib Lift to Up or Down until the desired height is reached.

4.2.10 Emergency stop

Push in the red "Emergency Stop" button on Ground or Platform Controls to off position to shut off all the functions. Repair any function that operates when Power Switch and red Emergency Stop button are pushed in.

4.2.11 Auxiliary power

CAUTION

1. **When operating the auxiliary power, do not operate more that one function at a time.**
2. **Compound operation is beyond the capability of auxiliary pump motor.**
3. **A toggle type auxiliary power control switch is located on the platform control and another is located on the ground control. Operation of either switch turns on the electrically driven auxiliary pump will operate upper boom lift, telescope, turntable rotate, jib lift, platform level and platform swing.**

Activate from the Platform control:

a) Turn Platform/Ground select key switch to Platform position;
b) Pull out the Power/Emergency switch to On position;
c) Pull the Auxiliary Power to On position and hold it;
d) Depress the foot switch;
e) Operate the corresponding control switch or handle of the required action function and hold it;
f) Release the auxiliary power switch, action control switch, handle and foot switch to end the action;
g) Position Power/Emergency Stop switch to Off position.

Activate from the Ground control:

a) Turn Platform/Ground select key switch to Ground position;
b) Pull out the Power/Emergency switch to On position;
c) Pull the Auxiliary Power to On position and hold it;
d) Operate the corresponding control switch of the required action and hold it;
e) Release the auxiliary power switch and corresponding control switch to end the action;
f) Position Power/Emergency Stop switch to Off position.

4.2.12 Shut down and park

a) Drive machine to a protected area;
b) Assure upper boom is fully retracted and lowered over rear (Drive) axle;

c) Remove platform load. Let the engine run at idle speed for 3-5 minutes to reduce the internal temperature of the engine;
d) At Ground Controls, turn Key Select switch to (center) Off Position, Power/Emergency Stop switch (down) to Off. Remove key;
e) All access panels and doors closed and secured;
f) Cover Platform Control console to protect instruction placards, warning decals and operating controls from hostile environment.

4.3 Transport and Lifting

Observe and Obey:

ZOOMLION provides this securement information as a recommendation. Drivers are solely responsible for making sure machines are properly secured and the correct trailer is selected pursuant to CHINA Department of Transportation regulations, other localized regulations, and their company policy.

ZOOMLION customers needing to containerize any lift or ZOOMLION product should source a qualified freight forwarder with expertise in preparing, loading and securing construction and lifting equipment for international shipment.

Only qualified aerial lift operators should move the machine on or off the truck.

The transport vehicle must be parked on a level surface.

The transport vehicle must be secured to prevent rolling while the machine is being loaded.

Be sure the vehicle capacity, loading surfaces and chains or straps are sufficient to withstand the machine weight. ZOOMLION lifts are very heavy relative to their size. See the serial label for the machine weight.

Be sure the machine is on a level surface or secured before releasing the brake.

Do not drive the machine on a slope that exceeds the uphill, downhill or side slope rating. See Driving on a Slope in the Operating Instructions section.

If the slope of the transport vehicle bed exceeds the maximum slope rating, the machine must be loaded and unloaded using a winch as described in the brake release operation.

4.3.1 Release the brake while towing

a) Chock the wheels to prevent the machine from rolling;
b) Release the wheel brakes by turning over all four drive hub disconnect caps;
c) Be sure the winch line is properly secured to the drive chassis tie points and the path is clear of all obstructions;
d) Reverse the procedures described to re-engage the brakes.

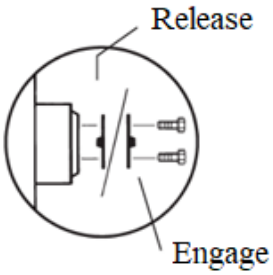

Note: traction machine is not recommended.If the machine must

be towed, the speed must not exceed 3.2 km/h. Securing to Truck or Trailer for Transit

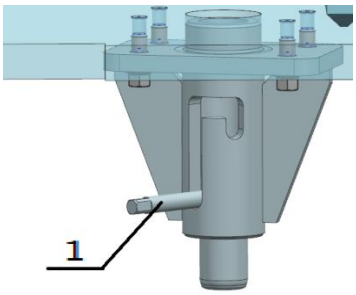

Always use the turntable rotation lock pin each time the machine is transported.

Panel Cradle Installation

Insert the hook piece through the slots in the panel cradle base.

Inspect the entire machine for loose or unsecured items.

4.3.2 Lifting

a) See serial label and “Technical Parameters” section in this manual for specific machine weight and total weight of the machine;

b) Place the boom in the stowed position;

c) Remove all loose items from the machine;

d) Properly adjust the rigging to prevent damage to the machine and so the machine remains level.

4.3.3 Securing the chassis

a) Use chains of ample load capacity;

b) Use a minimum of 4 chains;

c) Adjust the rigging to prevent damage to the chains.

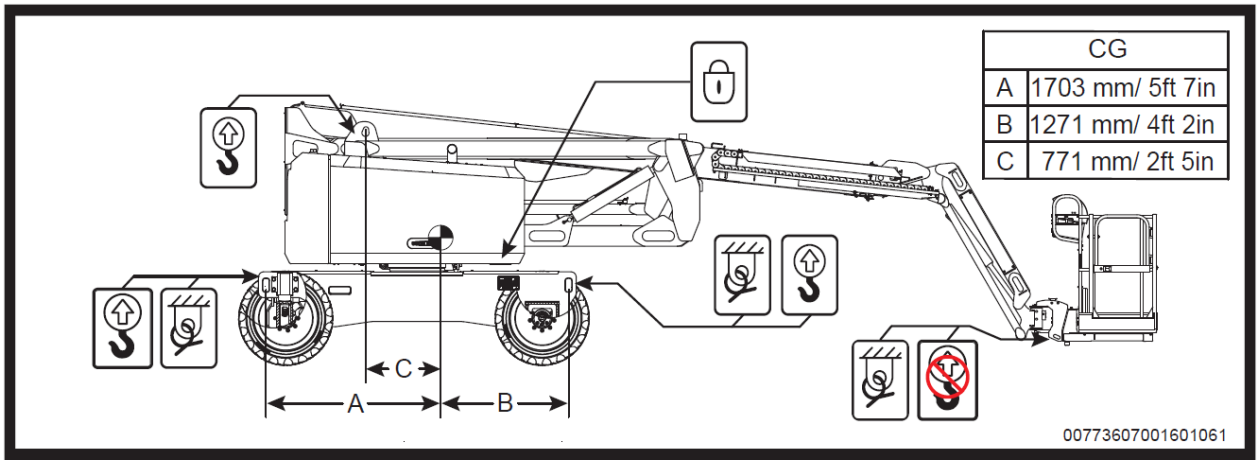

Figure 4-1 Lifting and Securing Instructions

4.3.4 Securing the platform

a) Be sure the boom and the platform are in stowed position;

b) Use the straps between the platform rotator (see Figure below) and platform base to secure the platform;

c) Use nylon tape to secure the platform. Do not use excessive downward force when securing the boom section.

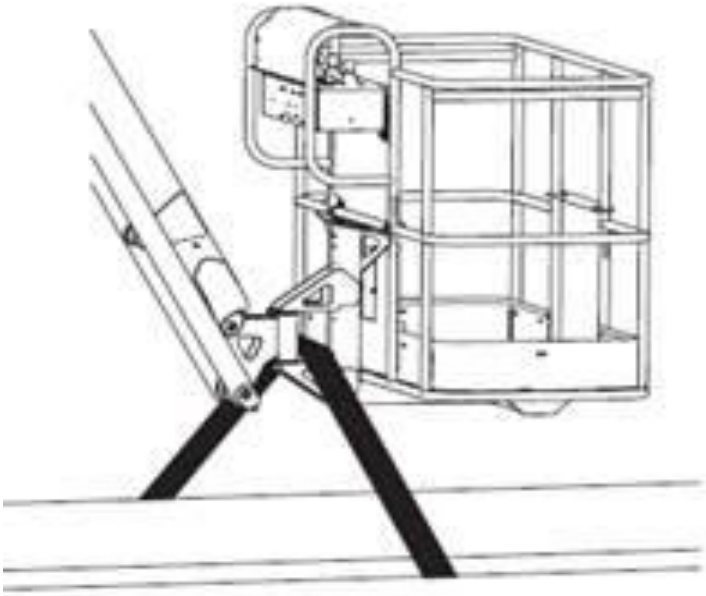

Figure 4-2 Securing the Platform

Use a cable tie or rope to secure the slider to the upper square tube of the work platform to prevent the slider from bumping during transportation.

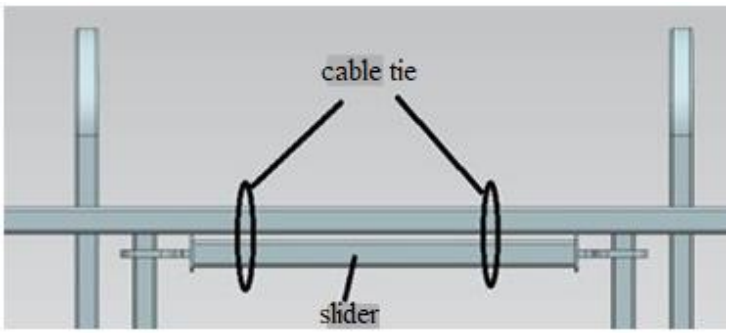

Figure 4-3 Securing the Platform

ZOOMLION

Operation and Safety Manual

Section 5 Maintenance

SECTION 5 MAINTENANCE

5.1 General

Observe and Obey:

a) Only routine maintenance items specified in this manual shall be performed by the operator;
b) Scheduled maintenance inspections shall be performed by qualified service technicians, according to the manufacturer's specifications and the requirements listed in the responsibilities manual;
c) Disposal of materials should be according to the regulations of government and relevant environmental protection administration;
d) Use only ZOOMLION approved replacement parts. ZOOMLION assumes no responsibility for hazards occurred to equipment and personnel caused by the use of unauthorized parts.

5.1.1 Maintenance symbols legend

The following symbols have been used in this manual to help communicate the intent of the instructions. When one or more of the symbols appear at the beginning of a maintenance procedure, it conveys the meaning below.

Indicates that tools will be required to perform this procedure.

Indicates that new parts will be required to perform this procedure.

Indicates that a cold engine is required before performing this procedure.

5.1.2 Pre-Start inspection

a) Be sure operator's, safety, and responsibilities manuals are complete, legible, and in the storage container located on the machine;
b) Be sure all decals are in place and legible;
c) Check for hydraulic oil leaks and proper oil level. Add oil if needed.See Maintenance section;
d) Check for battery fluid leaks and proper fluid level. Add distilled water if needed after battery charged.

Check the following components or areas for damage, improperly installed, or missing parts and unauthorized modifications:

1) Electrical components, wiring, and electrical cables;
2) Hydraulic hoses, fittings, cylinders, and manifolds;

3) Drive motor/motor;
4) Wear pads;
5) Tires and wheels;
6) Limit switches and horn;
7) Alarm and indicator (if equipped);
8) Nuts, bolts and other fasteners;
9) Brake release unit.

5.1.3 Maintenance hazards

a) Shut off power to all controls and ensure that all moving parts are secured from inadvertent motion prior to performing any adjustments or repairs;
b) Never work under an elevated platform until it has been fully lowered to the full down position, if possible, or otherwise supported and restrained from movement with appropriate safety props, blocking, or overhead supports;
c) DO NOT attempt to repair or tighten any hydraulic holes or fittings while the machine is powered on or when the hydraulic system is under pressure;
d) Always relieve hydraulic pressure from all hydraulic circuits before loosening or removing hydraulic components;
e) DO NOT use your hand to check for leaks. Use a piece of card- board or paper to search for leaks. Wear gloves to help protect hands from spraying fluid.

5.1.4 Body injury hazard

Do not operate a machine with a hydraulic oil or air leak. An air leak or hydraulic leak can penetrate and/or burn skin. During or after a period of running of the hydraulic system, the parts may produce high surface temperature, and improper contact will cause burn to skin. Overhauling or adjusting any part of hydraulic system can cause serious injuries. Only trained maintenance personnel are allowed to repair or adjust the hydraulic system.

Suggestion: access by the operator is only advised when performing a pre-operation inspection. All compartments must remain closed and secured during operation.

5.2 Power and Hydraulic System Maintenance

5.2.1 Check the engine oil level

Maintain the engine coolant at the proper level is essential to engine service life. Improper coolant level will affect the engine's cooling capacity and damage engine components.

Note: check the oil level with the engine off. Check the oil level dipstick. Add oil as needed.

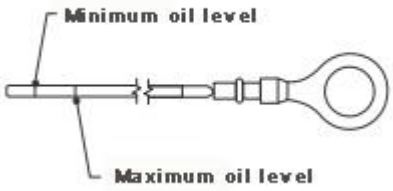

Table 5-1 Refuel condition

Type / Environmental Temperature	KUBOTA V2403-M-DI-ET04 WP3.2G50E317A	WEICHAI WP3.2G50E433 KUBOTA V2403 -CR-EW02
-15℃ 以上	CI-4 20W-40	CK-4 20W-40
（-20 ~ -15）℃	CI-4 15W-40	CK-4 15W-40
（-25 ~ -20）℃	CI-4 10W-40	CK-4 10W-40
（-30 ~ -25）℃	CI-4 5W-40	CK-4 5W-40
（-35 ~ -30）℃	CI-4 0W-40	CK-4 0W-40

5.2.2 Diesel requirements

Good engine performance depends on the quality of fuel. Benefits of using quality fuel: long engine life and acceptable exhaust emission levels. It is recommended to use fuel that meets the GB 17691-2018 standard in China, EN590 standard fuel in the European Union, and ASTM D975 standard fuel in North America.The minimum diesel fuel requirements for the engine are shown in the table below.

Table 5-2 Fuel Requirement

Environmental Temperature	Type
（-44 ~ -29）℃	-50#
（-29 ~ -14）℃	-35#
（-14 ~ -5）℃	-20#
（-5 ~ 4）℃	-10#
（4 ~ 8）℃	0#

8℃以上	5#

5.2.3 Check the engine coolant level

Maintain the engine coolant at the proper level is essential to engine service life. Improper coolant level will affect the engine's cooling capacity and damage engine components. Daily checks will allow the inspector to identify changes in coolant level that might indicate cooling system problems.

WARNING

Burn hazards.Be aware of hot engine parts and coolant. Touching hot engine parts or coolant could result in serious injury.

WARNING

a) **Burn hazards. Do not remove radiator cover while the engine is running. Contact with pressurized coolant can cause serious burns. Remove the radiator cover after the engine is cool.**

b) **Check the coolant level in recycle tank. Add coolant as required. The level should be visible at MAX mark of the coolant recycle tank or at level gauge. Do not overfill the coolant.**

5.2.4 Check hydraulic oil

Check the hydraulic oil level

Maintaining the hydraulic oil at the proper level is essential to machine operation. Improper hydraulic oil levels can damage hydraulic components. Daily checks allow the inspector to identify changes in oil level that might indicate the presence of hydraulic system problems.

Be sure the machine is on a firm and level surface and in stowed position.
By observing oil level in hydraulic oil tank, the hydraulic oil level after excluding air in the hydraulic system should reach the maximum scale mark on the hydraulic oil tank, and not be higher than bottom of the oil tank cap (different models have different maximum scale).

Add oil as needed. Do not overfill.

Hydraulic oil capacity

Table 5-1 Capacity

Model	ZA20J	
Hydraulic tank	75L	19.8 us gal
Hydraulic system oil quality (tank included)	160L	42.2 us gal

Hydraulic oil specification

Please refer to the Chart 5-2 below for the recommended type and model of hydraulic oil — Technical Parameters of Hydraulic Oil. Please select proper hydraulic oil according to the specific application environment of the equipment. For special environment or special requirements of users, please contact ZOOMLION or the hydraulic oil manufacturer.

Note: DO NOT mix oils of different brands or types, as they contain different additives which may cause negative effects. If mixing of hydraulic oils is unavoidable, permission must be obtained from the hydraulic oil manufacturer. After-sales service of ZOOMLION does not cover machine malfunction caused by hydraulic oil mixing.

Table 5-2 Technical parameters of hydraulic oil

Technical Parameter	Mobil SHC Aware H 32 (Eco-Friendly)	MobilDTE 10 Ultra 22	MobilDTE 10 Ultra 32	MobilDTE 10 Ultra 46	Calte Rando MV 22	Calte Rando MV 32	Kunlun 10 aviation hydraulic fluid (Ground)	Great Wall L-HV 32	Great Wall L-HV 46	Great Wall 4632 grease non-flammable hydraulic oil N32(Eco-Friendly)
ISO Viscosity	32	22	32	46	22	32	10	32	46	32
Pour Point ℃/°F	-30 /-22	-54 /-65.2	-54 /-65.2	-45 /-49	-36 /-32.8	-36 /-32.8	-50 /-58	-39 /-38.2	-37 /-34.6	-20 /-4
Flash Point ℃/°F	185 /365	224/ 435.2	250 /482	232/ 449.6	190 /374	210 /410	92 /197.6	231/ 447.8	240 /464	270 /518
Motion Viscosity (cSt)（40℃/104°F）	32	22.4	32.7	45.6	22.5	33.5	10 (50℃ /122°F)	33.4	48.7	28.8-35.2
VI viscosity Index)	140	164	164	164	155	155	150	150	150	180

Hydraulic oil viscosity and temperature limit

Proper use of hydraulic oil: please note the corresponding oil viscosity and temperature limit. Under normal conditions, the recommended oil temperature should be controlled at 30℃/86°F to 60℃/140°F. The oil temperature affects the oil viscosity and the thickness of the oil film. High temperatures also shorten the service life of oil seals and other rubber components, and the oil also evaporates and oxidizes.

Pre-delivery of the machine, specific model of hydraulic oil shall be added as required by customer. If machine operating environment temperature is beyond the temperature limit of the hydraulic oil, different hydraulic oil suited to the actual conditions shall be used in time. On account of the safety of

machine components and work efficiency, it is advisable that the starting temperature should be 25℃ /77°F higher than the pour point of hydraulic oil.

Changing hydraulic oil

We suggest that changing time of the hydraulic oil is as follows:

a) First changing:operating for 500 hrs after commissioning;

b) Second and subsequent changing:every 2,000 hrs of operation or once a year.

The above recommended intervals are suitable for most applications. Higher temperatures and pressures will shorten the oil's service life, so the hydraulic oil should be changed sooner than the recommended.For small load work, the oil change time can be extended.

Cleanliness of the hydraulic oil upon delivery is NAS9 (ISO4406 18/15), and for normal operation, the cleanliness should not be lower than NAS10 (ISO4406 19/16). We suggest that the hydraulic oil should be checked every 6 months, and the oil should be sampled at least once upon the time for oil changing. The oil sample can be sent to the hydraulic oil manufacturer or qualified third-party testing agency for analysis and to determine whether it is still usable.

Changing oil return filter

The oil return filter element is recommended to be changed every 1,000 hrs of operation or every 6 mouths, whichever comes first.Proper filter element condition is essential to good machine performance and service life. Dirty or clogged filters will affect machine performance and damage components. Under hostile environment and bad operating conditions, the filter should be checked and replaced more frequently.

5.3 Battery Maintenance

Battery inspection

Proper battery condition is essential to good machine performance and operational safety. Improper fluid levels or damaged cables and connections can result in component damage and hazardous conditions.

Note: this inspection is not required for machines with sealed or non-maintainable batteries.

Check electrolyte level of the battery every two weeks. Fully change the battery before adding water. If the electrolyte level is much higher than the plate, then no need to add water.

WARNING

Electrocution hazard

Contact with hot or live circuits may result in death or serious injury. Remove all rings, watches and jewelry.

WARNING

Body injury hazard

Batteries contain acid.Avoid spilling or contacting battery acid. Neutralize battery acid spills with baking soda and water.

Note: the battery should be fully charged before this inspection.

a) Only qualified riggers should rig the machine;
b) Only certified crane operators should lift the machine and only in accordance with the applicable crane regulations;
c) Be sure that the battery hold-down brackets are in place and secure.

Note: adding terminal protectors and a corrosion preventative sealant will help eliminate the corrosion on the battery terminals and cables.

5.4 Regular Maintenance

Maintenance performed quarterly, annually and every two years must be completed by a person trained and qualified to perform maintenance on this machine according to the procedures found in the service manual for this machine.

Machines that have been out of service for more than three months must receive the quarterly inspection before they are put back into service.

Note: lubrication intervals are based on machine operation under normal conditions. For machines used in multi-shift operations or exposed to hostile environments or conditions, lubrication frequencies must be increased accordingly.

5.4.1 Rotation reduction gears

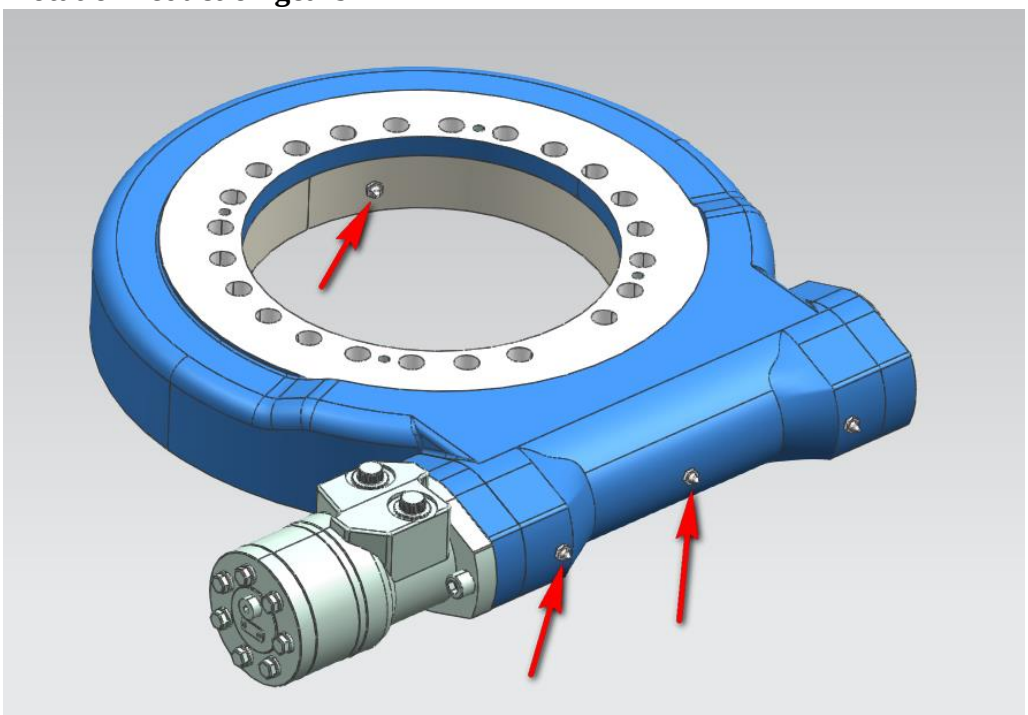

Lube Point(s) –Replaceable Filter.

Capacity –As required.

Lube -Changcheng 7408B-1 Gear Grease.

Interval –Every 4 months or 150 hours.

Comment –Apply grease and rotate in 90 degree intervals until bearing is completely lubricated.

WARNING

DO NOT over-lubricate the bearings, otherwise it will cause damage to outside seal of casing.

5.4.2 Hydraulic tank

Liquid Level –25-30 L (6-7 us gal).

Interval –Check level daily;Change every year or 1,000 hours of operation.

Comment –On new machines, those recently overhauled, or after changing hydraulic oil, operate all system a minimum of two complete cycles and recheck oil level in reservoir.

Hydraulic return filter

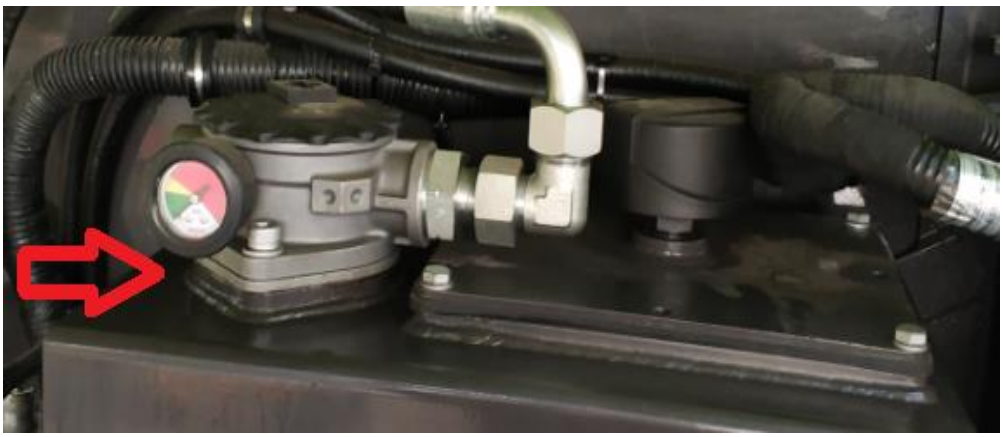

Maintenance Point(s) –Replaceable Element.

Interval –Change after first 50 hrs. and every 6 months or 1,000 hrs.

Hydraulic tank breather

Maintenance Point(s) –Tank Breather

Interval –Change after first 50 hrs. and every 6 months or 1,000 hrs thereafter.

Comment –Remove wing nut and cover to replace.Under certain conditions, it may be necessary to replace on a more frequent basis.

5.4.3 Travelling reduction gears

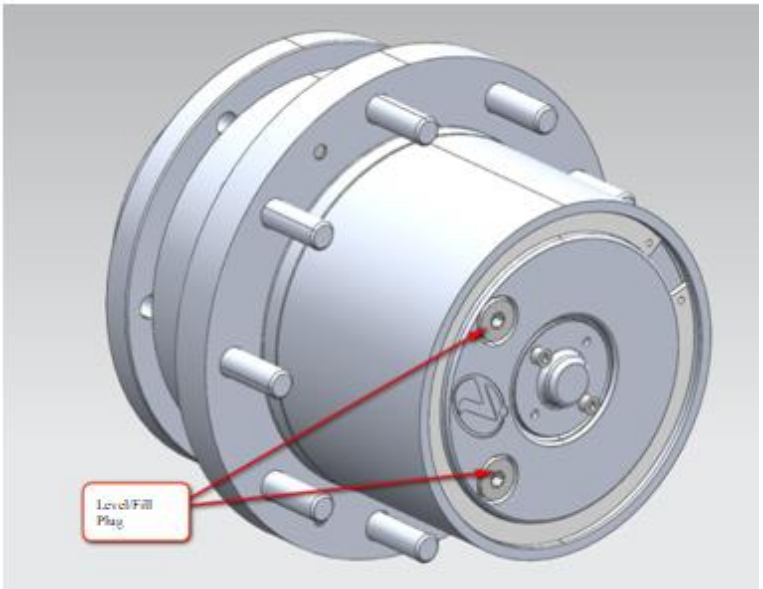

Lube Point(s) –Level/Fill Plug.

Capacity –1 L (0.3 us gal).

Model:SAE80W/90 Industrial Gear Oil for Close Motor.

Interval – Check level every 3 months or 150 hours of operation;change every year or 2,000 hours of operation.

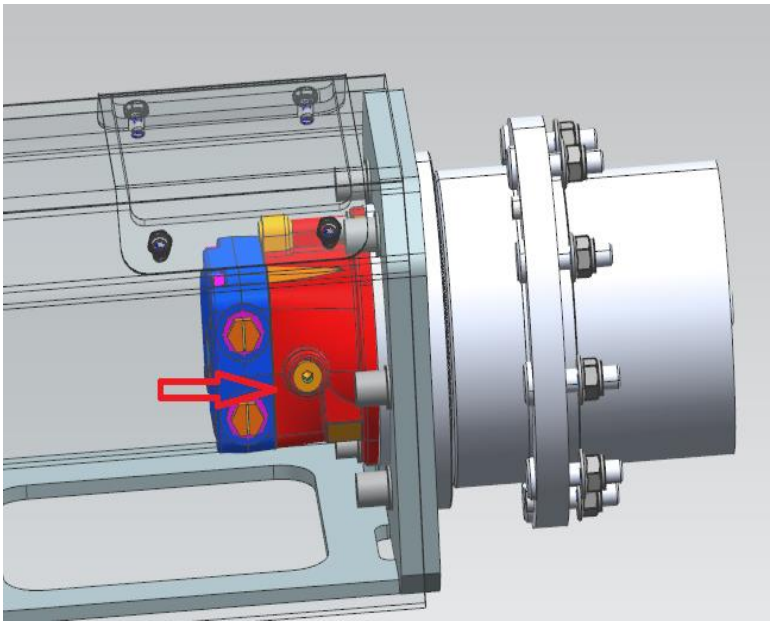

Lube Point(s) –Fill Plug.

Capacity –89ml (0.02 us gal).

Type: Same as hydraulic oil.

Interval – Change as needed.

Replace engine oil with filter- Kubota V2403

5.4.4 Replace engine oil - Deutz D2.9L4/Deutz D447L4/Kubota V2403

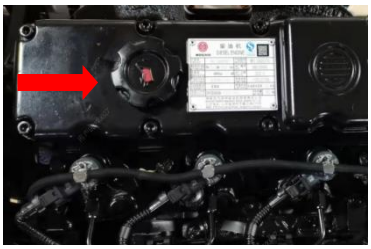

KUBOTA V2403-M-DI-ET04 WEICHAI WP3.2G50E317A KUBOTA V2403 -CR-EW02
WEICHAI WP3.2G50E433

Maintenance point- Replace engine oil

Capacity- KUBOTA V2403-M-DI-ET04/ KUBOTA V2403 -CR-EW02 around 9.5L、WEICHAI WP3.2 G50E317A/ WEICHAI WP3.2G50E433 around 9.5L。

Interval- First maintenance after 50 hours of use, thenafter, every 6 months or 500 hours of operation, whichever comes first.

Comment: check level daily/ Change in accordance with engine manual.

KUBOTA V2403-M-DI-ET04 WEICHAI WP3.2G50E317A
KUBOTA V2403 -CR-EW02 WEICHAI WP3.2G50E433

Maintenance point – replace engine oil filter element

Interval –First maintenance after 50 hours of use, thenafter, every 6 months or 500 hours of operation, whichever comes first.

Comment –Change in accordance with engine manual.

5.4.5 Fuel filter

a） First class fuel filter

KUBOTA V2403-M-DI-ET04

WEICHAI WP3.2G50E317A
WEICHAI WP3.2G50E433

KUBOTA V2403 -CR-EW02

Maintenance point- Replaceable element.

Interval- Drain off water everyday, every 6 months or 500 hrs of operation, whichever comes first.

Comment –Change in accordance with engine manual.

b） Second class fuel filter

KUBOTA V2403-M-DI-ET04

WEICHAI WP3.2G50E317A
WEICHAI WP3.2G50E433

KUBOTA V2403 -CR-EW02

Maintenance point- Replaceable element.

Interval- Every 6 months or 500hrs of operation, whichever comes first.

Comment –Change in accordance with engine manual.

5.4.6 Air filter

Maintenance Point(s) –Replaceable Element.

Interval –Every 6 months or 500 hours of operation or as indicated by the condition indicator.

Note: check dustproof valve everyday. Change in accordance with engine manual.

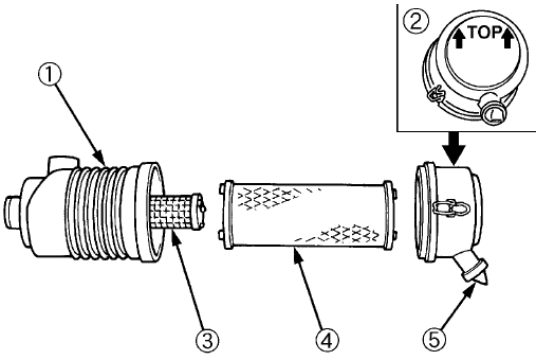

（1）Air filter main body（2）Lid （3）Safety filter （4）Main filter element （5）Dust valve

After using for no more than 500 hours, the main filter element can be purged with compressed air, but the pressure must be lower than 205kPa, and the number of purges should not exceed 6 times.

NOTE: When replacing the filter element, do not remove the safety filter element.

5.4.7 Engine coolant

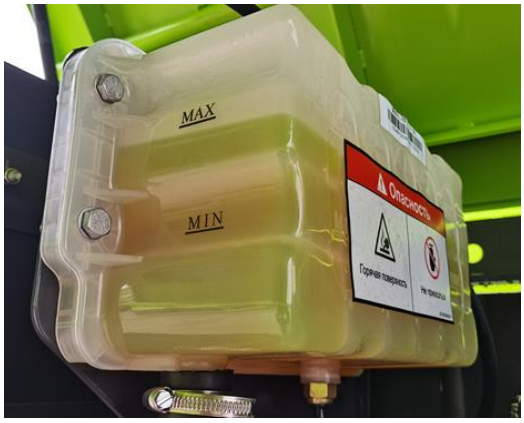

Maintenance Point(s) –Add/replace anti-freezing solution.

Refilling requirements: After running the engine for 5 minutes, the coolant level in the cooling water tank is between the MIN and MAX scale lines.

Battery Level: KUBOTA V2403-M-DI-ET04/ KUBOTA V2403 -CR-EW02 around 11L；WEICHAI WP3.2G50E317A/ WEICHAI WP3.2G50E433 around 12L。

Interval –Check oil level daily, change every 2000 hours or one year (whichever come first).

5.4.8 DPF (Diesel Particulate Filter, for Euro Stage V machine only)

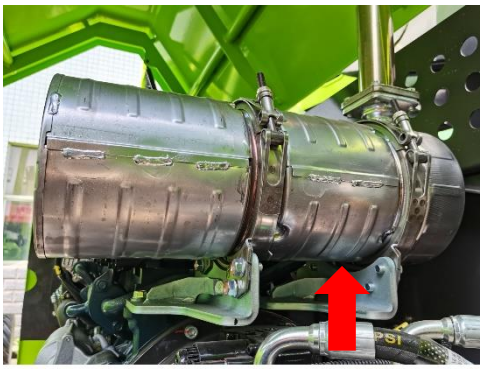

KUBOTA V2403 -CR-EW02

Maintenance point: replace DPF filter element

Interval: every 6000h of use

Note: Replacement requires professional maintenance personnel.

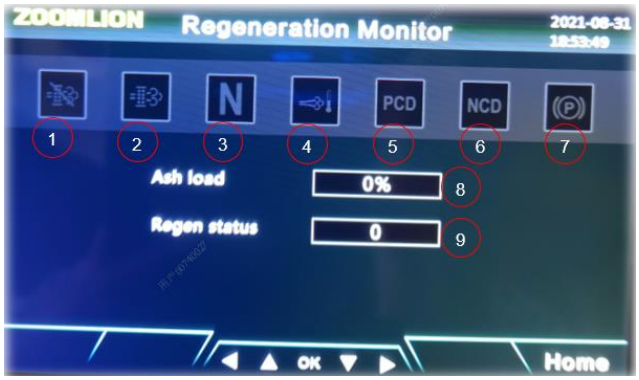

（1） Regeneration prohibited （2）Regeneration request （3）Neutral switch（4） High temperature regeneration（5）PCD failure （6）NCD failure （7）Park switch （8） Post-treatment PM accumulation （9）Regeneration monitoring

KUBOTA V2403 -CR-EW02

Maintenance point: DPFregeneration.

Interval: Whenever the regeneration request light is on.

Operation method: park the machine in a place without fire risk, after starting the engine, turn the regeneration switch upward, the engine will automatically enter the regeneration process, and it will take about 40 minutes to complete the regeneration.

Note: Failure to regenerate the DPF in time will cause engine failure and limit power output. When the regeneration request light on the panel starts to flash, the machine must be parked for regeneration, otherwise the DPF will be blocked.

Note: The temperature of the exhaust gas discharged from DPF regeneration is as high as 600 ℃. When the equipment enters the flammable and explosive area, the regeneration prohibition switch should be turned on to avoid fire.

5.5 Engine cold start

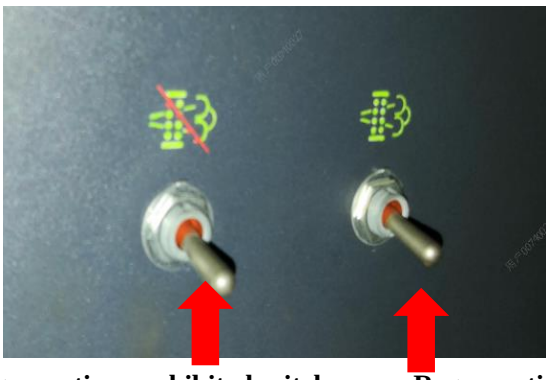

Regeneration prohibitedswitch **Regeneration switch**

KUBOTA V2403 -CR-EW02

When the ambient temperature is lower than 10 ℃, the equipment needs to be preheated when starting.

a）When the ambient temperature is lower than 10℃, if the machine is powered on, the engine will automatically open the glow plug for preheating, and the working time is about 8s. If it cannot be started within 8s, it can be powered on 2~3 times. The relationship between the heating time of the glow plug and the temperature is shown in Table 5-5.

Table 5-5 Relationship between glow plug heating time and temperature

Ambient temperature	Required time
＞10℃	0s
-5℃~10℃	10s
-20℃~-5℃	15s

Glow plug indicator

b）The engine should run at idle speed for 10min before other operation.

Note: Do not start the engine frequently to avoid irreversible damage to the engine.

Note: When the ambient temperature is lower than -20°C, additional auxiliary starting equipment (such as electric heater) is required to start.

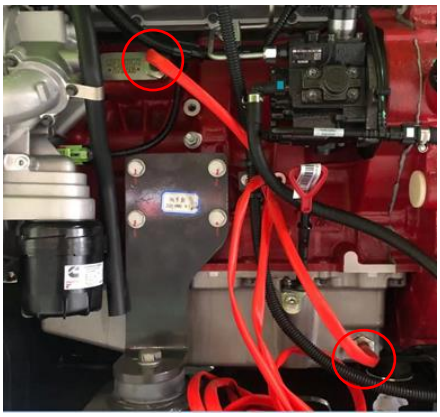

Electric engine heater (optional)

5.6 Fuel system exhaust

The fuel system needs to be vented in the following situations:

a） After removing and refitting the fuel filter and fuel lines;

b） After the fuel tank is empty;

c） Preparing to use the engine after a long period of non-use.

Exhaust operation method:

1. Fuel the tank;

2. Loosen the bleed plug of the fuel filter a few turns;

3. When air bubbles no longer appear, retighten the plug;

4. Open the bleed plug at the top of the fuel injection pump;

5. When air bubbles no longer appear, retighten the plug.

Fuel filter bleed plug

Fuel injection pump top bleed plug

5.7 Engine

Refer to Engine Maintenance Instructions.

5.8 Tire and Wheel

Tire replacement

ZOOMLION recommends a replacement tire be the same size, ply and brand as originally installed on the machine. Please refer to the ZOOMLION Parts Manual for the part number of the approved tires for a particular machine model. If not using a ZOOMLION approved replacement tire, we recommend that replacement tires have the following characteristics:

a) Equal or greater ply/load rating and size of original;
b) Tire tread contact width equal or greater than original;
c) Wheel diameter, width, and offset dimensions equal to the original;
d) Approved for the application by the tire manufacturer (including inflation pressure and maximum tire load).

Unless specifically approved by ZOOMLION do not replace foam filled or ballast filled tire assembly with a pneumatic tire. When selecting and installing a replacement tire, ensure that all tires are inflated to the pressure recommended by ZOOMLION. Due to size variations between tire brands, both tires on the same axle should be the same.

Wheel and tire replacement

The rims installed on each product model have been designed for stability requirements which consist of track width, tire pressure, and load capacity. Size changes such as rim width, center piece location, larger or smaller diameter, etc., without written factory recommendations, may result in an unsafe condition regarding stability.

Wheel installation

It is extremely important to apply and maintain proper wheel mounting torque.

WARNING

Wheel nuts must be installed and maintained at the proper torque to prevent loose wheels, broken studs, and possible dangerous separation of wheel from the axle. Be sure to use only the nuts matched to the cone angle of the wheel.

Tighten the lug nuts to the proper torque to prevent wheels from coming loose. Use a torque wrench to tighten the fasteners. If you do not have a torque wrench, tighten the fasteners with a lug wrench, then immediately have a service garage or dealer tighten the lug nuts to the proper torque. Over-tightening will result in breaking the studs or permanently deforming the mounting stud holes in the wheels. The proper procedure for attaching wheels is as follows:

a) Start all nuts by hand to prevent cross threading. DO NOT use lubricant on threads or nuts;

b) Tighten nuts in the following sequence;

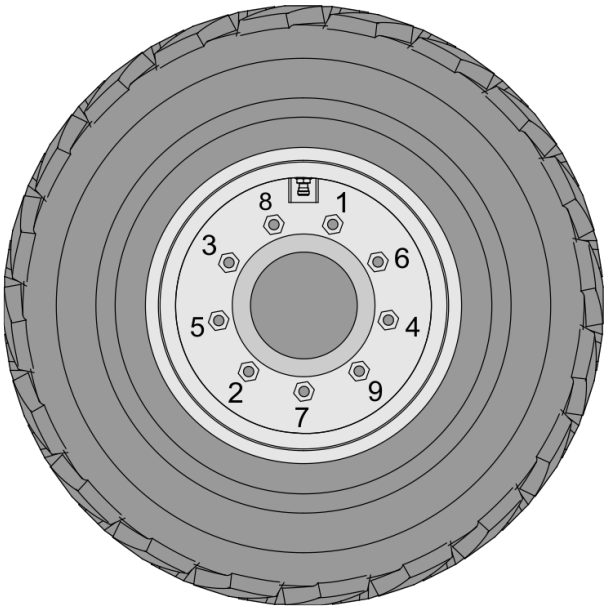

a) The tightening of the nuts should be done in stages. Following the recommended sequence, tighten nuts per wheel torque;

Table 5-3 Wheel torque table

Torque Sequence		
First Stage	Second Stage	Third Stage
75 Nm/54.3 ft·lb	150Nm/108.5 ft·lb	300 Nm/217 ft·lb

b) Wheel nuts should be torqued after first 50 hours of operation and after each wheel removal. Check and torque every 3 months or 150 hours of operation.

ZOOMLION

Operation and Safety Manual

Section 6 Storage and Ex-factory Test

SECTION 6 STORAGE AND EX-FACTORY TEST

6.1 Storage Conditions

Ambient temperature for machine storage and transportation should be between -20℃/-4℉ and 40℃/104℉, with relative humidity not greater than 85% and 100% only for short-term.

6.2 Ex-factory Test Items

Machine must complete testing items in the following table before delivery:

Table 6-1 Testing Items Before Delivery

Tests Items	Load Testing		Testing Movement
Overload Test	125%	450kg/992 lb	Platform Lifting
Functional Test	110%	396kg/873 lb	Traveling & Platform Lifting
Braking Test	100%	360kg/551 lb	Max Speed of Forward & Reverse Traveling

ZOOMLION

Operation and Safety Manual

Section 7 Technical Parameter

SECTION 7 TECHNICAL PARAMETER

Table 7-1 Technical Parameters

Model	ZA20J	Parameters	
Dimension	Platform Height	19.38m	63ft 7in
	Max Horizontal Outreach	12.30m	40ft 4in
	Up and Over Height	8.25m	27ft 1in
	Overall Length	8.82m	28ft 11in
	Overall Width	2.46m	8ft 1in
	Overall Height	2.53m	8ft 6in
	Platform Size	2.44m×0.91m	8ft×2ft12in
	Wheelbase	2.52m	8ft 3in
	Ground Clearance	0.42m	1ft 5in
Working Performance	Platform Capacity (Unrestricted / Restricted)	250/360 kg	550 /793 lb
	Drive Speed	6.1 km/h	3.79 mph
	Gradeability	45%	
	Turning Radius (Inside)	2.51 m	8ft 3in
	Turning Radius (Outside)	5.47 m	17ft 11in
	Tail Swing	0.4 m	1ft 4in
	Platform Rotation	±90°	
	Max. Working Slope	5°	
	Guaranteed sound power level	104dBA	
	The vibration total value to which the hand-arm system is subjected does not exceed	≤2.5 m/s	≤5.59 mph
Power	Engine	V2403-CR 36.8kw V2403-M 36kw WP3.2G50E433 36.8kw WP3.2G50E317A 36.8kw	V2403-CR 49.3hp V2403-M 48.3hp WP3.2G50E433 49.3hp WP3.2G50E317A 49.3hp
Tire	Type	33×12/D610 Foam-filled Tires	
Weight	Gross	10000 kg	22046 lb
Working Environment	Ambient temperature	－25°C~40°C	－25°C~40°C
	Wind Speed	≤12.5 m/s	27.96mph
	Lateral Load	400N	90 lbs force

Table 7-1 Technical Parameters (Continuous)

Model	ZA20J	Parameters	
Range of Motion	Platform Rotation	±90°	
	Jib Working Range	-60°~70°	
	Upper Boom Working Range	-42°~70°	
	Upper Boom Retract	3800mm	12ft 6in.
	Tower Boom Working Range	0°~72°	
	Turntable Swing	360°continuous	
Functional speed	Upper boom lifting	55 s~65 s	
	Upper boom lowering	55 s~65 s	
	Turntable swing (a round)	103 s~113 s	
	Upper boom extending	40 s~50 s	
	Upper boom retracting	40 s~50 s	
	Platform rotation (left and right)	17 s~23 s	
	Jib lifting	17 s~23 s	
	Jib lowering	17 s~23 s	
	Tower boom lifting	27 s~33 s	
	Tower boom lowering	27 s~33 s	
Hydraulic	System pressure	21 Mpa	

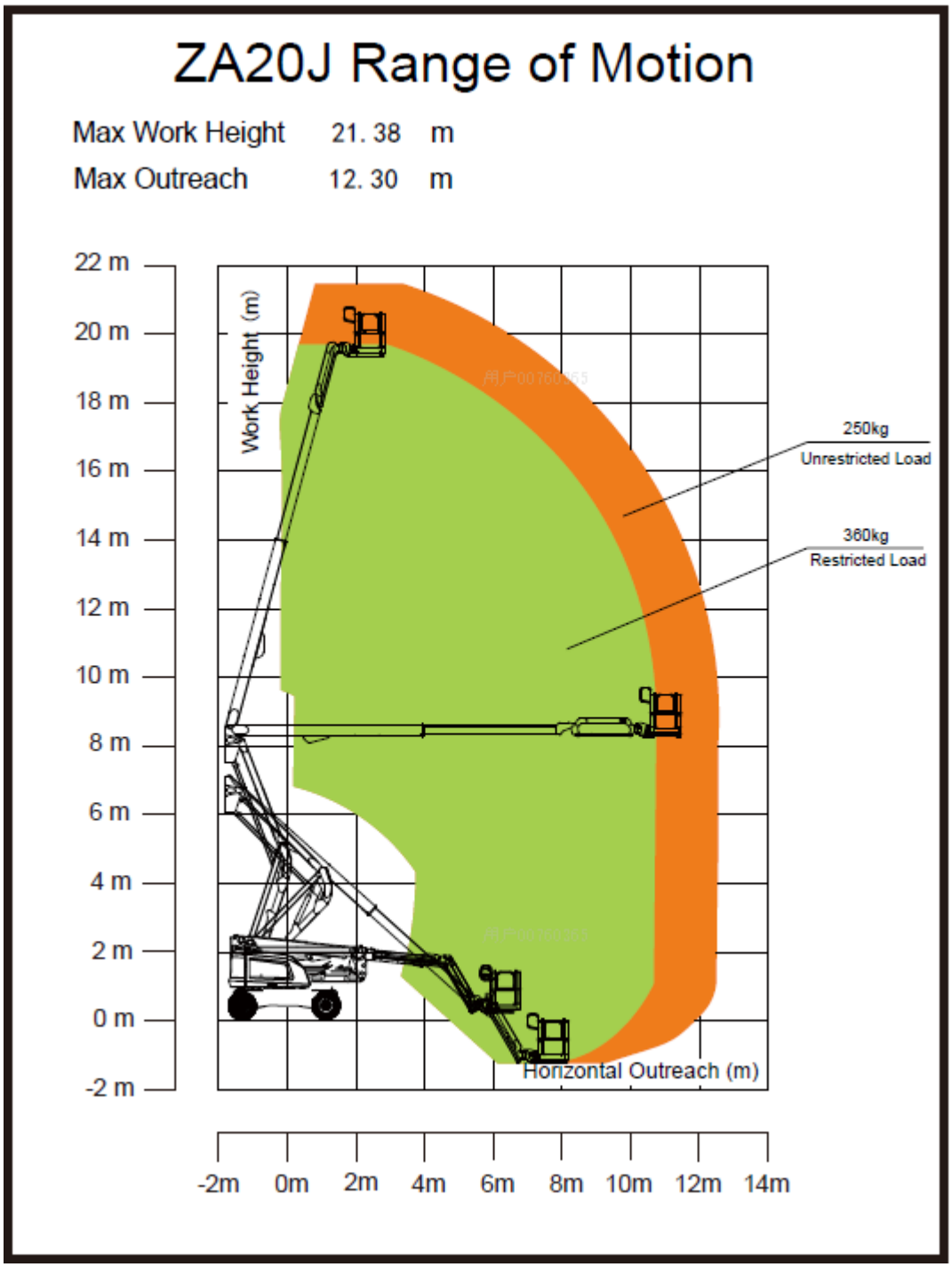

Figure 7-1 ZA20J Range of Motion

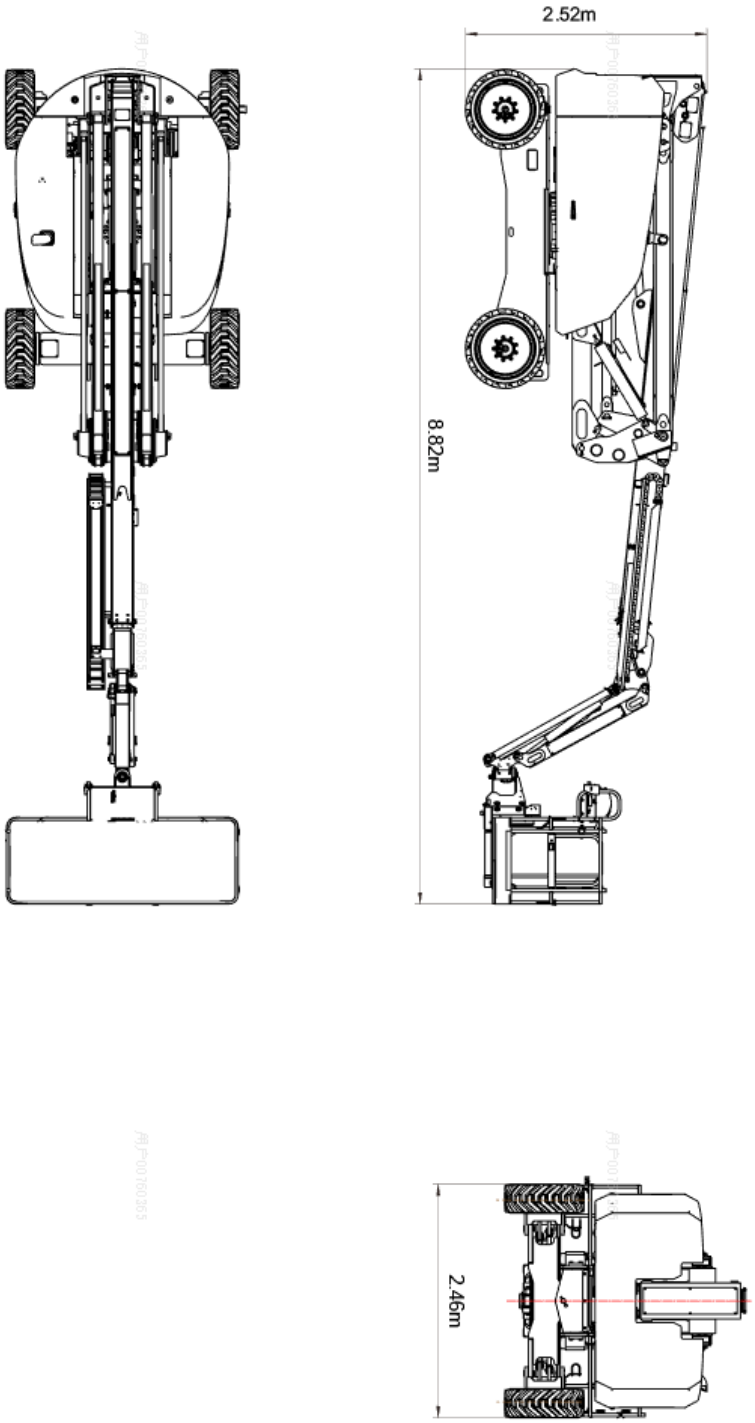

Figure 7-2 ZA20J Dimension in Traveling Mode