DFG/TFG 316-435

05.18

Operating instructions

GB

51694150

07.18

DFG 316
DFG 320
DFG 425
DFG 430
DFG 435
TFG 316
TFG 320
TFG 425
TFG 430
TFG 435

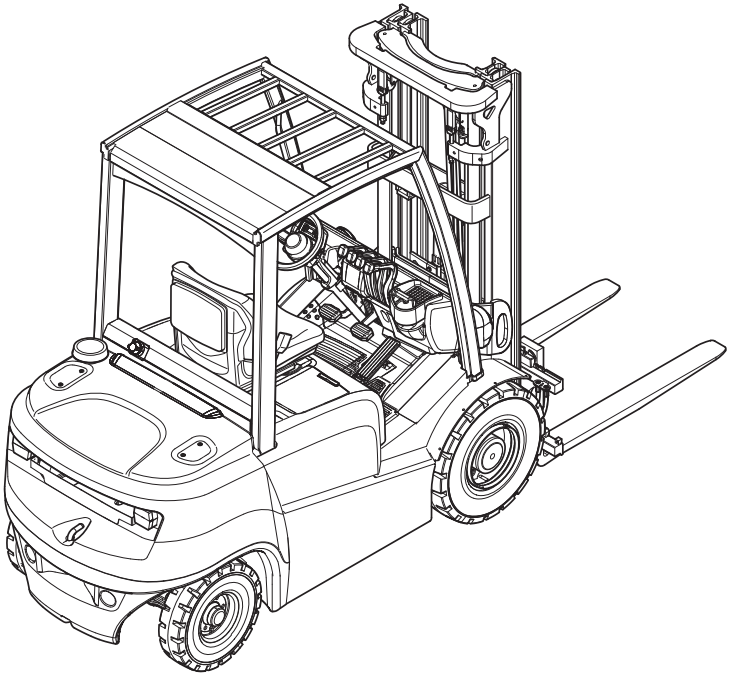

JUNGHEINRICH

Declaration of Conformity

Jungheinrich AG, Friedrich-Ebert-Damm 129, 22047 Hamburg, Germany
Manufacturer or agent acting in the European Union

Model	Option	Serial no.	Year of manufacture
DFG 316 DFG 320 DFG 425 DFG 430 DFG 435 TFG 316 TFG 320 TFG 425 TFG 430 TFG 435			

Additional information

On behalf of

Date

(GB) EC Declaration of Conformity

The undersigned hereby declare that the powered industrial truck described below in detail complies with the European Directives 2006/42/EG (Machinery Directive) and 2014/30/EU (Electromagnetic Compatibility - EMC) including amendments as well as the legislative decree to incorporate the directives in national law. The signatories are in each case individually authorised to compile the technical documents.

Foreword

Notes on the operating instructions

The present ORIGINAL OPERATING INSTRUCTIONS are designed to provide sufficient instruction for the safe operation of the industrial truck. The information is provided clearly and concisely. The chapters are arranged by letter and the pages are numbered continuously.

The operator manual details different industrial truck models. When operating and servicing the industrial truck, make sure that the particular section applies to your truck model.

Our trucks are subject to ongoing development. We reserve the right to alter the design, equipment and technical features of the system. No guarantee of particular features of the truck should therefore be assumed from the present operating instructions.

Safety notices and text mark-ups

Safety instructions and important explanations are indicated by the following graphics:

⚠ DANGER!

Indicates an extremely hazardous situation. Failure to comply with this instruction will result in severe irreparable injury and even death.

⚠ WARNING!

Indicates an extremely hazardous situation. Failure to comply with this instruction may result in severe irreparable injury and even death.

⚠ CAUTION!

Indicates a hazardous situation. Failure to comply with this instruction may result in slight to medium injury.

NOTE

Indicates a material hazard. Failure to comply with this instruction may result in material damage.

➔ Used before notices and explanations.

- ● Indicates standard equipment
- ○ Indicates optional equipment

Copyright

Copyright of these operating instructions remains with JUNGHEINRICH AG.

Jungheinrich Aktiengesellschaft

Friedrich-Ebert-Damm 129
22047 Hamburg - Germany

Tel: +49 (0) 40/6948-0

www.jungheinrich.com

07.18 EN

Contents

A Correct Use and Application 11

1 General 11
2 Correct application 11
3 Approved application conditions 12
4 Proprietor responsibilities 13
5 Adding attachments and/or optional equipment 13

B Truck Description 15

1 Application 15
1.1 Truck models and rated capacity 15
2 Assemblies and Functional Description 16
2.1 Travel direction definition 16
2.2 Assembly Overview 17
2.3 Functional Description 18
3 Technical Specifications 20
3.1 Performance data 21
3.2 Dimensions 23
3.3 Weights 26
3.4 Mast versions 27
3.5 Tyre type 32
3.6 Engine Data 33
3.7 EN norms 34
3.8 Conditions of use 35
3.9 Electrical Requirements 35
4 Identification Points and Data Plates 36
4.1 Data plate 38
4.2 Truck capacity plate 39
4.3 Attachment capacity plate 41
5 Stability 43
5.1 Wind loads 43

C Transport and Commissioning 45

1 Transport 45
2 Truck laden 45
2.1 Centre of gravity of the truck 45
2.2 Lifting the truck by crane 46
2.3 Loading with another industrial truck 48
3 Securing the truck during transport 49
4 Using the Truck for the First Time 51

D Fuelling the Truck 53

1 General 53
1.1 Safety regulations for handling diesel fuel and LPG 53
1.2 LPG system relief valve 55
2 Adding diesel 56
2.1 Fuelling 56

2.2 Fuel display (DFG only) ... 58
3 LPG containers ... 59
3.1 LPG bottles ... 59
3.2 LPG tank (○) ... 61

E Operation ... 62

1 Safety Regulations for the Operation of Forklift Trucks ... 62
2 Displays and Controls ... 64
2.1 Control panel with display unit ... 66
3 Description of the Display and Controls on the Armrest (○) ... 70
3.1 Pilots ... 72
3.2 Function symbols for the Pilots ... 73
3.3 Control panel with display unit ... 75
4 Preparing the Truck for Operation ... 79
4.1 Checks and Operations to Be Performed Before Starting Daily Work ... 79
4.2 Entry and exit ... 81
4.3 Trucks with reduced headroom (○) ... 82
4.4 Setting up the operator position ... 82
4.5 Seat Belt ... 94
5 Industrial Truck Operation ... 96
5.1 Safety regulations for truck operation ... 96
5.2 Preparing the truck for operation ... 100
5.3 Starting the Truck ... 101
5.4 Parking the truck securely ... 103
5.5 Battery Isolator ... 104
5.6 Travel ... 105
5.7 Steering ... 107
5.8 Brakes ... 108
5.9 Adjusting the forks ... 110
5.10 Replacing the forks ... 111
5.11 Lifting, transporting and depositing loads ... 112
5.12 Operating the Lift Mechanism and Integrated Attachments ... 115
5.13 Safety instructions for operating additional attachments ... 132
5.14 Operating additional attachments for the SOLO-PILOT ... 136
5.15 Operating Additional Attachments for SOLO-PILOT on the Armrest ... 138
5.16 Operating Additional Attachments for MULTI-PILOT on the Armrest ... 141
5.17 Operating Additional Attachments for DUO-PILOT on the Armrest ... 144
5.18 Fitting additional attachments ... 147
6 Towing trailers ... 150
7 Optional equipment ... 152
7.1 Steel cab ... 152
7.2 Sliding windows ... 153
7.3 Heating ... 153
7.4 Removable load backrest ... 153
7.5 Adding window washer system fluid ... 154
7.6 Particle Filter (DFG) ... 155
7.7 CanCode Keypad ... 160
7.8 Control Layout "N" on the Armrest ... 175
7.9 USB charger module in armrest ... 177
7.10 Camera system ... 178
7.11 Floor-Spot ... 180
7.12 Horn Button on Overhead Guard ... 182
7.13 StVZO road traffic regulations equipment ... 183

8 Troubleshooting ... 184
8.1 Troubleshooting ... 184
8.2 Starting aid ... 187
8.3 Operating the truck without its own drive system ... 188

F Industrial Truck Maintenance ... 193

1 Operational Safety and Environmental Protection ... 193
2 Maintenance Safety Regulations ... 194
2.1 Working on the electrical system ... 194
2.2 Consumables and used parts ... 194
2.3 Wheels ... 195
2.4 Lift Chains ... 195
2.5 Hydraulic system ... 196
2.6 Working in the vicinity of the engine ... 197
3 Lubricants and Lubrication Schedule ... 198
3.1 Handling consumables safely ... 198
3.2 Lubrication Schedule ... 200
3.3 Consumables ... 201
4 Maintenance and repairs ... 203
4.1 Preparing the truck for maintenance and repairs ... 203
4.2 Lifting and jacking up the truck safely ... 204
4.3 Opening the Engine Cover ... 205
4.4 Opening the Engine Cover with Comfort Seat (○) ... 206
4.5 Removing the Covers ... 210
4.6 Removing the Floor Plate ... 210
4.7 Replacing wheels ... 211
4.8 Checking the Wheel Mounting ... 213
4.9 Hydraulic system ... 214
4.10 Cooling system ... 217
4.11 Engine maintenance ... 219
4.12 Checking electrical fuses ... 229
4.13 Cleaning ... 233
4.14 Starter battery ... 235
4.15 Exhaust system ... 236
4.16 Transmission and Drive Axle ... 237
4.17 Brake ... 238
4.18 Restoring the truck to service after maintenance and repairs ... 238
5 Decommissioning the Industrial Truck ... 239
5.1 Prior to decommissioning ... 240
5.2 During decommissioning ... 240
5.3 Restoring the truck to service after decommissioning ... 240
6 Safety tests to be performed at intervals and after unusual incidents ... 241
7 Final de-commissioning, disposal ... 241
8 Human vibration measurement ... 241

G Maintenance, Inspection and Changing of Maintenance Parts Requiring Replacement ... 243

1 Maintenance Contents DFG 316-435 ... 244

1.1 Owner 244
1.2 Customer Service 248
2 Maintenance Contents TFG 316-435 260
2.1 Owner 260
2.2 Customer Service 264

A Correct Use and Application

1 General

The truck must be used, operated and serviced in accordance with the present instructions. All other types of use are beyond its scope of application and may result in damage to personnel, the industrial truck or property.

2 Correct application

NOTE

The maximum load and load distance are indicated on the capacity plate and must not be exceeded.
The load must rest on the load handler or be lifted by an attachment approved by the manufacturer.
The load must be fully raised, see page 112.

The following operations are in accordance with regulations and are permitted:
- Lifting and lowering of loads.
- Stacking and retrieving loads.
- Transporting of lowered loads over short distances
- Picking up and using attachments and accessories approved by the manufacturer may require additional approval from local authorities or an expert opinion.
- Occasional towing of trailers with the trailer coupling

➔ When towing trailers, the load must be secured on the trailer. The permissible trailer load must not be exceeded.

The following operations are prohibited:
- Travelling with a raised load (> 30 cm)
- Carrying and lifting persons without approved attachments or optional equipment [a)]
- Pushing or pulling loads, with the exception of occasional towing of trailers with the trailer coupling
- Transporting suspended loads without expert certification and without authorised optional equipment

➔ If the truck is to be operated with suspended loads, proof of sufficient operational stability under local operating conditions must be obtained from a specialist assessor.

a) Lifting passengers with a working platform or a work basket may be permitted in some countries, this must be verified by the operating company.

➔ Germany: DGUV information 208-031 (BGI/GUV-5183) Use of Working Platforms on Industrial Trucks with Mast

➔ Australia: AS 2359.1 Powered Industrial Trucks, General Requirements; AS 2359.2 Powered Industrial Trucks, Operations

3 Approved application conditions

⚠ DANGER!

Do not exceed the permissible surface and point loading on the travel lanes.
At blind spots get a second person to assist.
The driver must ensure that the loading dock /dock leveller cannot be removed or come loose during loading/unloading.

⚠ WARNING!

Operating an LPG truck under ground level areas could result in explosions.
LPG is heavier than air. An explosive LPG/air mixture could therefore form under ground level areas without sufficient ventilation.

▶ Do not use LPG trucks under ground level areas.

⚠ WARNING!

Use under extreme conditions
Using the truck under extreme conditions can result in malfunctions and accidents.

▶ Special equipment and authorisation are required if the truck is to be constantly used in extreme conditions, especially in dusty or corrosive atmospheres.

▶ The truck cannot be used in areas at risk of explosion.

▶ In adverse weather conditions (thunder, lightning) the industrial truck must not be operated outside or in endangered areas.

– Operation in industrial and commercial environments.
– Permissible temperature range -20 °C to 40 °C.
– Operation only on secure, level surfaces with sufficient capacity.
– Do not exceed the permissible surface and spot load limits on the travel routes.
– Operation only on routes that are visible and approved by the operating company.
– Negotiating inclines up to a maximum of 15 %.
– Do not travel across or at an angle on inclines. Travel with the load facing uphill.
– Operation in partially public traffic.
– Do not operate LPG trucks under ground level areas.

4 Proprietor responsibilities

For the purposes of the present operating instructions the “operating company” is defined as any natural or legal person who either uses the industrial truck himself, or on whose behalf it is used. In special cases (e.g. leasing or renting) the proprietor is considered the person who, in accordance with existing contractual agreements between the owner and user of the industrial truck, is charged with operational duties. The proprietor must ensure that the industrial truck is used only for the purpose it is intended for and that danger to life and limb of the user and third parties are excluded. Furthermore, accident prevention regulations, safety regulations and operating, servicing and repair guidelines must be followed. The operating company must ensure that all users have read and understood these operating instructions.

NOTE

Failure to comply with the operating instructions invalidates the warranty. The same applies if improper work is carried out on the truck by the customer or third parties without the permission of the manufacturer.

5 Adding attachments and/or optional equipment

The mounting or installation of additional equipment which affects or enhances the performance of the industrial truck requires the written permission of the manufacturer. Local authority approval may also need to be obtained.
Local authority approval however does not constitute the manufacturer’s approval.

B Truck Description

1 Application

The DFG/TFG 316-435 is a four-wheel IC engine sit-down forklift truck. The DFG series are diesel engine trucks, while the TFG series are fitted with a petrol engine for LPG operation.

The DFG/TFG 316-435 is a cantilevered counterbalanced truck which can pick up, lift, transport and deposit loads.

Closed bottom pallets can also be lifted.

The DFG/TFG 316-435 is equipped with a hydrodynamic drive. The left pedal is a combined slow travel and brake pedal and activates the rapid-lift function during slow travel. The middle pedal operates the service brake.

1.1 Truck models and rated capacity

The rated capacity depends on the model. The rated capacity can be derived from the model name.

DFG316

DFG	Model name
3	Series
16	Rated capacity x 100 kg

The rated capacity is not generally the same as the permissible capacity. The capacity can be found on the capacity plate attached to the truck.

2 Assemblies and Functional Description

2.1 Travel direction definition

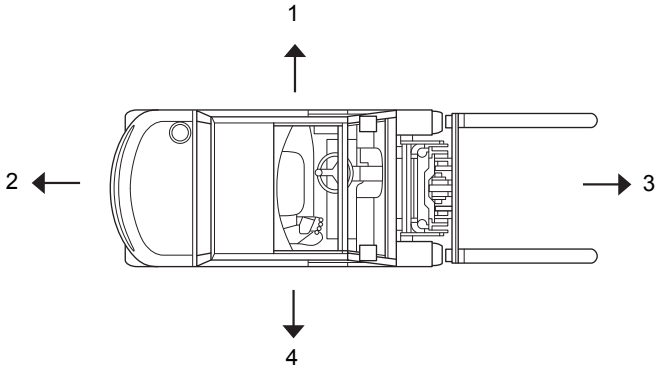

The following conventions have been agreed for travel direction specification:

Item	Travel direction
1	Left
2	Reverse
3	Forward
4	Right

2.2 Assembly Overview

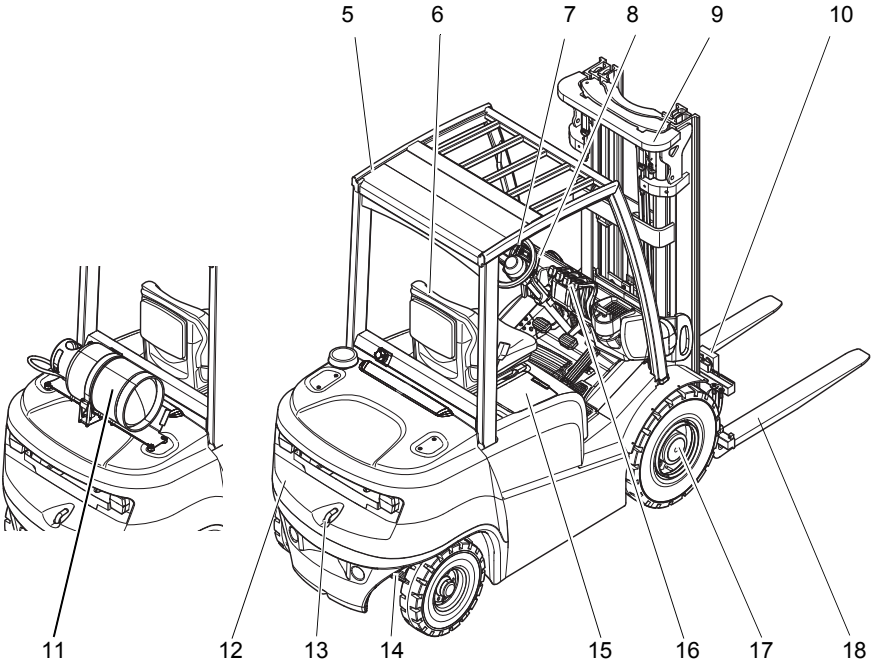

Item		Description	Item		Description
5	●	Overhead guard	13	●	Trailer coupling
6	●	Driver's seat	14	●	Steering axle
7	●	Steering wheel	15	●	Engine cover
8	●	Display unit	16	●	Hydraulic controls
9	●	Lift mast	17	●	Drive axle
10	●	Fork carriage	18	●	Forks
11	●	LPG bottle (TFG only)			
12	●	Counterweight			
	● = Standard equipment			○= Optional equipment	

2.3 Functional Description

Chassis

The chassis, in conjunction with the drive axle and the counterweight, forms the supporting base structure of the truck. It is used to support the main components.

The hydraulic oil tank is integrated in the right-hand side of the chassis and the fuel tank for the DFG series in the left-hand side.

Operator position and overhead guard

The overhead guard (5) comes in a range of models and protects the driver from falling objects and other external influences.

All the controls are ergonomically arranged. The steering column and driver's seat can be adjusted individually.

The controls and warnings on the display unit (8) enable the system to be monitored during operation, thereby ensuring a very high level of safety.

Steering

The steer cylinder of the hydrostatic steering is integrated in the steer axle (14) and is controlled by the power steering. The steer axle is fully floating in the chassis to ensure excellent grip even on non-level surfaces.

Wheels

All wheels are located within the truck geometry. A choice of pneumatic or superelastic tyres are available.

Engine

High performance, water-cooled diesel and LPG engines with long useful lives and low consumption and emission levels.

Electrical System

12-volt system with 3-phase alternator. A repeat start block prevents malfunctions when the truck is powered up. For diesel engines, a rapid pre-heat system is installed; LPG motors have an electronic ignition system for rapid and trouble-free engine starting. The key switch is used to start and stop the engine.

Drive system

A powershift transmission with an transmission oil cooler and a torque converter transfers the power to the drive axle (17). The drive axle and the transmission have a common oil circuit.
Forward/reverse or neutral can be set with the travel direction switch on the left side of the steering column.

Brake system

The brake pedal actuates two wet-disc brakes hydraulically, which are applied to the drive wheels. An additional slow-travel/brake pedal makes the truck easier to use at slow speeds. The slow-travel/brake pedal should not be used for normal braking

purposes. The parking brake is operated via an electric switch to apply the wet-disc brakes.

Hydraulic system

A multi-pilot valve allows for sensitive operation of the functions via the controls. A speed-controlled hydraulic pump ensures a proportionate and efficient supply to the hydraulic functions.

Lift mast

Two or three-stage masts, optionally with free-lift function; narrow mast sections ensure excellent visibility of the forks and attachments. The fork carriage and the lift mast run on maintenance-free support rollers.

Attachments

The trucks can be optionally fitted with mechanical and hydraulic attachments.

3 Technical Specifications

All technical details refer to standard trucks.
Values indicated with *) may vary, depending on the types of equipment used (e.g. mast, cabin, tyres etc.).

➔ The technical specifications comply with the German "Industrial Truck Data Sheet" Guidelines.
Technical modifications and additions reserved.

➔ Air pressure, air temperature and air humidity can have a negative effect on the engine performance available.

Limited use at great altitudes: An increase in altitude of 1000 m leads to a reduction in performance of around 10% due to the reduced air pressure.

Load centre distance

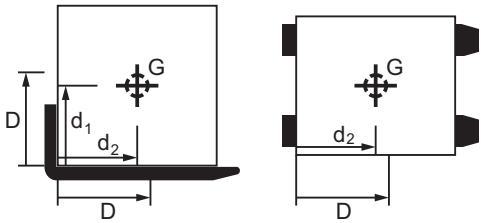

The load centre distance D of the load handler is specified as the horizontal distance from the front face and the vertical distance from the upper edge of the load handler.

➔ The capacity plate for standard load handlers specifies valid load centre distances of 500 mm, 600 mm and 700 mm.

The distances d_1 and d_2 depicted in the illustration between the load handler and the actual centre of gravity G of the load must be smaller or equal to the load centre distance D ($d_1 \leq D$ and $d_2 \leq D$) to avoid the risk of overturning, see page 112.

3.1 Performance data

	Model	DFG 316	DFG 320	
Q	Capacity (where D = 500 mm) [1]	1600	2000	kg
D	Load centre distance	500	500	mm
	Travel speed * with / without load	18/19	18/19	km/h
	Lift speed with / without load	0.54/0.58	0.57/0.59	m/s
	Lowering speed with / without load	0.55	0.55	m/s
	Gradeability [2]* with / without load	27/30	22/30	%
	Acceleration * with / without load to 15 m	5.2/4.5	5.6/4.7	s
	Available working pressure for attachments	210	210	bar
	Oil volume for attachments	40	40	l/min

	Model	TFG 316	TFG 320	
Q	Capacity (where D = 500 mm) [1]	1600	2000	kg
D	Load centre distance	500	500	mm
	Travel speed * with / without load	19/20	19/20	km/h
	Lift speed with / without load	0.56/0.58	0.58/0.60	m/s
	Lowering speed with / without load	0.55	0.55/0.5	m/s
	Gradeability [2]* with / without load	27/30	25/30	%
	Acceleration time * with/without load to 15 m	4.7/4.0	4.9/4.2	s
	Available working pressure for attachments	210	210	bar
	Oil volume for attachments	40	40	l/min

[1] for vertical mast.

[2] The values shown represent the maximum gradeability to overcome short differences in height and surface unevenness (surface edges). The truck must not operate on inclines of more than 15%.

	Model	DFG 425	DFG 430	DFG 435	
Q	Capacity (where D = 500 mm) [1]	2500	3000	3500	kg
D	Load centre distance	500	500	500	mm
	Travel speed * with / without load	17/18	17/18	17/18	km/h
	Lift speed with / without load	0.55/0.57	0.58/0.60	0.48/0.50	m/s
	Lowering speed with / without load	0.55	0.55	0.55	m/s
	Gradeability [2]* with / without load	24/27	20/26	18/24	%
	Acceleration * with / without load to 15 m	5.4/4.8	5.6/4.8	5.8/5.0	s
	Available working pressure for attachments	210	210	210	bar
	Oil volume for attachments	40	40	40	l/min

	Model	TFG 425	TFG 430	TFG 435	
Q	Capacity (where D = 500 mm) [1]	2500	3000	3500	kg
D	Load centre distance	500	500	500	mm
	Travel speed * with / without load	18/19	18/19	18/19	km/h
	Lift speed with/without load	0.58/0.60	0.59/0.61	0.50/0.52	m/s
	Lowering speed with / without load	0.55	0.55	0.55	m/s
	Gradeability [2]* with/without load	23/27	20/26	17/24	%
	Acceleration time * with/without load to 15 m	5.7/5.0	6.2/5.4	6.6/5.6	s
	Available working pressure for attachments	210	210	210	bar
	Oil volume for attachments	40	40	40	l/min

[1] for vertical mast.

[2] The values shown represent the maximum gradeability to overcome short differences in height and surface unevenness (surface edges). The truck must not operate on inclines of more than 15%.

3.2 Dimensions

	Description	DFG/TFG 316	DFG/TFG 320	
a/2	Safety clearance	100	100	mm
h_1	Collapsed height*	2016	2023	mm
h_2	Free lift*	150	150	mm
h_3	Lift*	2900	2900	mm
h_4	Extended height*	3490	3512	mm
h_6	Overhead guard height*	2120	2120	mm
h_7	Seat height*	1075	1075	mm
h_{10}	Coupling height	375	372	mm
a	Mast tilt, fwd.*	6°	6°	°
ß	Mast tilt, back*	7°	7°	°
l_1	Length, including forks*	3311	3368	mm
l_2	Length to fork face*	2261	2318	mm
b_1	Overall width*	1113	1113	mm
s/e/l	Fork dimensions*	40/100/1050	40/100/1050	mm
m_1	Ground clearance, laden, below mast*	93	95	mm
m_2	Ground clearance centre wheelbase*	111	109	mm
	Fork carriage ISO 2328 class / type A, B	2A	2A	mm
b_3	Fork carriage width	980	980	mm
Ast	Aisle width for pallets 800 x 1200 lengthways	3829	3866	mm
Ast	Aisle width for pallets 1000 x 1200 crossways	3630	3667	mm
Wa	Turning radius	2020	2050	mm
b_{13}	Smallest turning radius	562	562	mm
x	Load distance*	409	416	mm
D	Load centre of gravity	500	500	mm
y	Wheelbase	1500	1500	mm

*) The data listed in the table corresponds to the standard version.

	Model	DFG/TFG 425	DFG/TFG 430	DFG/TFG 435	
a/2	Safety clearance	100	100	100	mm
h_1	Height, mast lowered*	2129	2122	2201	mm
h_2	Free lift*	150	150	150	mm
h_3	Lift*	2900	2900	2900	mm
h_4	Mast height extended*	3659	3657	3685	mm
h_6	Overhead guard height*	2175	2180	2180	mm
h_7	Seat height*	1130	1135	1135	mm
h_{10}	Coupling height	420	430	430	mm
a	Mast tilt, fwd.*	6	6	6	°
ß	Mast tilt, back*	8	8	8	°
l_1	Length, including forks*	3617	3768	3863	mm
l_2	Length to fork face*	2567	2718	2813	mm
b_1	Overall width*	1192	1296	1296	mm
s/e/l	Fork dimensions*	40/100/1050	45/125/1050	50/125/1050	mm
m_1	Ground clearance, laden, below mast*	106	104	131	mm
m_2	Ground clearance centre wheelbase*	141	155	153	mm
	Fork carriage ISO 2328 class / type A, B	2 A	3 A	3 A	mm
b_3	Fork carriage width	1120	1120	1120	mm
Ast	Working aisle width for pallets 800 x 1200 longit.	4187	4333	4448	mm
Ast	Aisle width for pallets 1000 x 1200 crossways	3987	4133	4248	mm
Wa	Turning radius	2315	2440	2550	mm
b_{13}	Smallest turning radius	720	730	750	mm
x	Load distance*	472	493	498	mm
D	Load centre of gravity	500	500	500	mm
y	Wheelbase	1650	1700	1780	mm

*) The data listed in the table corresponds to the standard version.

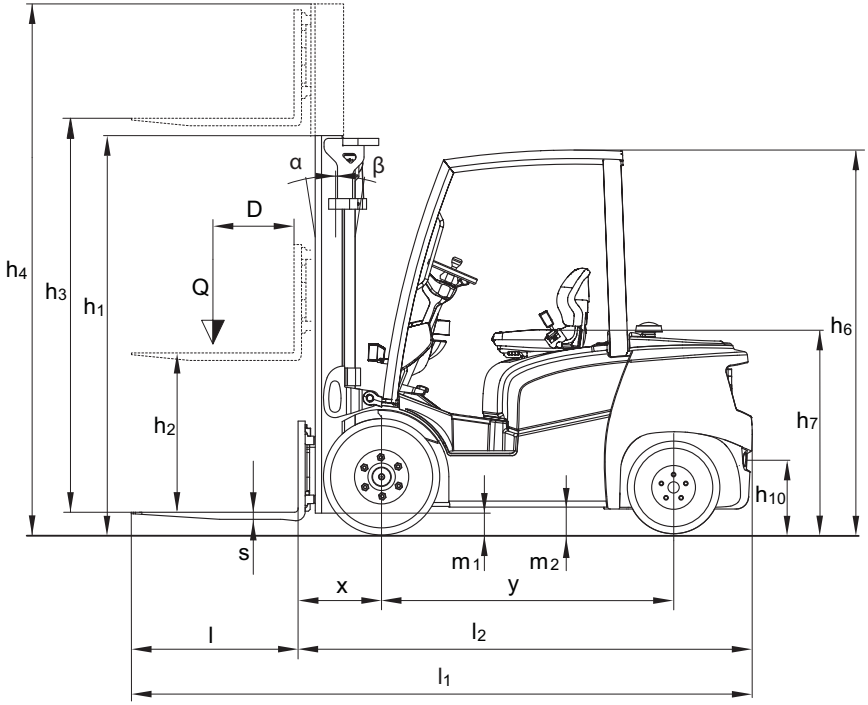
α
β
D
Q
h4
h3
h1
h2
h6
h7
h10
s
m1
m2
x
y
l
l2
l1

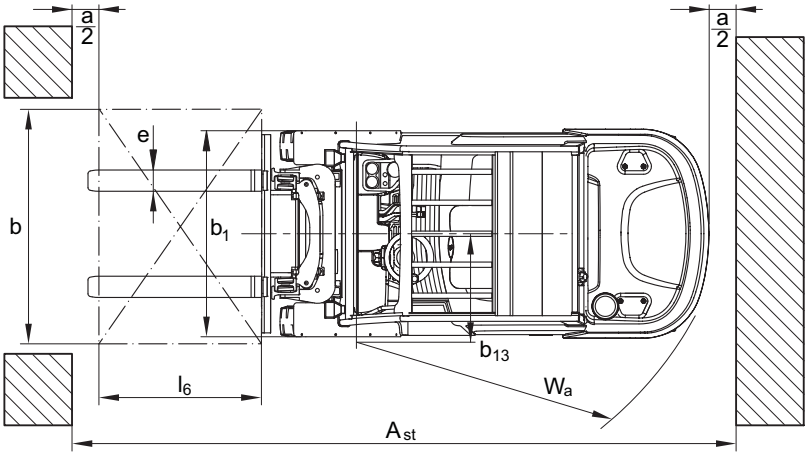
a/2
a/2
e
b
b1
b13
l6
Wa
Ast

3.3 Weights

All dimensions in kg.

	DFG 316	DFG 320
Net weight*	2620	2980
Axle loading, unladen front / rear*	1210/1410	1220/1760
Axle loading, laden front / rear*	3780/440	4440/540

	TFG316	TFG 320
Net weight*	2620	2980
Axle loading, unladen front / rear*	1190/1430	1200/1780
Axle loading, laden front / rear*	3760/460	4420/560

*) The data listed in the table corresponds to the standard version.

	DFG 425	DFG 430	DFG 435
Net weight*	3660	4190	4570
Axle loading, unladen front / rear*	1510/2150	1640/2550	1710/2860
Axle loading, laden front / rear*	5480/680	6390/800	7170/900

	TFG 425	TFG 430	TFG 435
Net weight*	3640	4170	4550
Axle loading, unladen front / rear*	1490/2150	1630/2540	1700/2850
Axle loading, laden front / rear*	5460/680	6370/800	7150/900

*) The data listed in the table corresponds to the standard version.

3.4 Mast versions

All dimensions in mm.

DFG/TFG 316

Mast chart					
Description	**Lift h_3**	**Free lift h_2**	**Collapsed height h_1**	**Extended height h_4**	**Mast weight (kg)**
ZT	2900	150	2016	3490	377
	3100	150	2116	3690	389
	3300	150	2216	3890	401
	3500	150	2316	4090	412
	3700	150	2416	4290	424
	4000	150	2516	4590	456
	4300	150	2716	4890	474
	4500	150	2816	5090	485
ZZ	3100	1481	2071	3690	411
	3300	1581	2171	3890	423
	3500	1681	2271	4090	436
	3700	1781	2371	4290	448
	4000	1931	2521	4590	481
DZ	4400	1441	2031	4990	535
	4640	1521	2111	5230	550
	4700	1541	2131	5290	553
	4800	1581	2171	5390	560
	5000	1651	2241	5590	573
	5500	1831	2421	6090	622
	6000	2001	2591	6590	653
	6500	2181	2771	7090	685
	7000	2351	2941	7590	715
	7500	2521	3111	8090	746

Special trucks are not included in this overview.

DFG/TFG 320

Mast chart					
Description	**Lift h_3**	**Free lift h_2**	**Collapsed height h_1**	**Extended height h_4**	**Mast weight (kg)**
ZT	2900	150	2023	3512	377
	3100	150	2123	3712	389
	3300	150	2223	3912	401
	3500	150	2323	4112	412
	3700	150	2423	4312	424
	4000	150	2523	4612	456
	4300	150	2723	4912	474
	4500	150	2823	5112	485
ZZ	3100	1436	2078	3742	438
	3300	1536	2178	3942	452
	3500	1636	2278	4142	467
	3700	1736	2378	4342	481
	4000	1886	2528	4642	516
DZ	4400	1396	2038	5042	581
	4640	1476	2118	5282	597
	4700	1496	2138	5342	602
	4800	1536	2178	5442	610
	5000	1606	2248	5642	623
	5500	1786	2428	6142	678
	6000	1951	2598	6642	712
	6500	2136	2778	7142	751
	7000	2306	2948	7642	784
	7500	2476	3118	8142	818

Special trucks are not included in this overview.

DFG/TFG 425

Mast chart					
Component	**Lift h_3**	**Free lift h_2**	**Collapsed height h_1**	**Extended height h_4**	**Mast weight (kg)**
ZT	2900	150	2129	3659	495
	3100	150	2229	3859	510
	3300	150	2329	4059	525
	3500	150	2429	4259	541
	3700	150	2529	4459	556
	4000	150	2679	4759	579
	4300	150	2879	5059	629
	4500	150	2979	5259	640
	4700	150	3079	5459	660
	5000	150	3229	5759	683
	5500	150	3529	6259	723
	5800	150	3679	6559	752
	6000	150	3779	6759	767
ZZ	3100	1600	2194	3694	604
	3300	1700	2294	3894	622
	3500	1800	2394	4094	640
	3700	1900	2494	4294	659
	4000	2050	2644	4594	686
DZ	4400	1500	2094	4994	792
	4700	1600	2194	5294	819
	5000	1700	2294	5594	846
	5500	1900	2494	6094	900
	6000	2100	2694	6594	976
	6500	2300	2894	7094	1030
	7000	2500	3094	7594	1084
	7500	2700	3294	8094	1138

Special trucks are not included in this overview.

DFG/TFG 430

Mast chart					
Description	**Lift h_3**	**Free lift h_2**	**Collapsed height h_1**	**Extended height h_4**	**Mast weight (kg)**
ZT	2900	150	2122	3657	576
	3100	150	2222	3857	612
	3300	150	2322	4057	630
	3500	150	2422	4257	648
	3700	150	2522	4457	666
	4000	150	2672	4757	693
	4300	150	2872	5057	749
	4500	150	2972	5257	767
	4700	150	3072	5457	785
	5000	150	3222	5757	812
	5500	150	3522	6257	866
	5800	150	3672	6557	893
	6000	150	3772	6757	911
ZZ	3100	1450	2187	3837	681
	3300	1550	2287	4037	702
	3500	1650	2387	4237	723
	3700	1750	2487	4437	743
	4000	1900	2637	4737	774
DZ	4400	1350	2087	5137	848
	4700	1450	2187	5437	877
	5000	1550	2287	5737	906
	5500	1750	2487	6237	965
	6000	1950	2687	6737	1046
	6500	2150	2887	7237	1106
	7000	2350	3087	7737	1164
	7500	2550	3287	8237	1223

Special trucks are not included in this overview.

DFG/TFG 435

Mast chart					
Description	**Lift h_3**	**Free lift h_2**	**Collapsed height h_1**	**Extended height h_4**	**Mast weight (kg)**
ZT	2900	150	2201	3685	611
	3100	150	2301	3885	629
	3300	150	2401	4085	648
	3500	150	2501	4285	667
	3700	150	2601	4485	685
	4000	150	2751	4785	713
	4300	150	2951	5085	770
	4500	150	3051	5285	788
	4700	150	3151	5485	807
	5000	150	3301	5785	835
	5500	150	3601	6285	891
	5800	150	3751	6585	918
	6000	150	3851	6785	937
ZZ	3100	1501	2266	3865	677
	3300	1601	2366	4065	699
	3500	1701	2466	4265	720
	3700	1801	2566	4465	742
	4000	1951	2716	4765	774
DZ	4400	1401	2166	5165	885
	4700	1501	2266	5465	912
	5000	1601	2366	5765	942
	5500	1801	2566	6265	1003
	6000	2001	2766	6765	1087
	6500	2201	2966	7265	1149
	7000	2401	3166	7765	1210
	7500	2601	3366	8265	1271

Special trucks are not included in this overview.

3.5 Tyre type

⚠ WARNING!

The use of tyres that do not match the manufacturer's specifications can result in accidents.

The quality of tyres affects the stability and performance of the truck.

Uneven wear affects the truck's stability and increases the stopping distance.

▶ When replacing tyres make sure the truck is not skewed.

▶ Always replace tyres in pairs, i.e. left and right at the same time.

➔ When replacing rims and tyres fitted at the factory, only use the manufacturer's original spare parts. Otherwise the manufacturer's specifications cannot be ensured. If you have any queries contact the manufacturer's customer service department.

Description		DFG/TFG	
		316	**320**
Front tyres	SE*	6.50-10	6.50-10
	Pneumatic*	6.50-10-14 PR	6.5-10-14 PR
	Tyre pressure in bar	10	10
	Torque in Nm	200	200
Rear tyres	SE*	18x7-8	18x7-8
	Pneumatic*	18x7-8-14 PR	18x7-8-14 PR
	Tyre pressure in bar	9	9
	Torque in Nm	200	200

Description		DFG/TFG		
		425	**430**	**435**
Front tyres	SE*	7.0 - 12	27 x 10 - 12	27 x 10 - 12
	Pneumatic*	7.0 - 12-16 PR	27 x 10 - 12 - 20 PR	27 x 10 - 12 - 20 PR
	Tyre pressure in bar	10	9	9
	Torque in Nm	380	380	380
Rear tyres	SE*	6 x 9	6.50 x 10	6.50 x 10
	Pneumatic*	6 x 9 - 10PR	6.50 x 10-10PR	6.50 x 10-10PR
	Tyre pressure in bar	8.5	7.75	7.75
	Torque in Nm	200	200	200

*) The models listed in the table correspond to the standard version. Other tyres can be used depending on the truck's equipment.

3.6 Engine Data

Model	DFG 316	DFG 320	
Cylinders / cubic capacity	4/2434	4/2434	cm³
Idle speed	900	900	rpm
Rated speed (without load)	2200	2200	rpm
Engine output	31.2	31.2	kW
Fuel consumption 60 VDI duty cycles/h	2.4	2.8	l/h

Model	TFG 316	TFG 320	
Cylinders / cubic capacity	4/2491	4/2491	cm³
Idle speed	900	900	rpm
Rated speed (without load)	2200	2200	rpm
Engine output	30	30	kW
Fuel consumption 60 VDI duty cycles/h	2.8	2.9	kg/h

Model	DFG 425	DFG 430	DFG 435	
Cylinders / cubic capacity	4/2434	4/2434	4/2434	cm³
Idle speed	900	900	900	rpm
Rated speed (without load)	2200	2200	2200	rpm
Engine output	36.5	36.5	36.5	kW
Fuel consumption 60 VDI duty cycles/h	3.2	3.7	3.9	l/h

Model	TFG 425	TFG 430	TFG 435	
Cylinders / cubic capacity	4/2491	4/2491	4/2491	cm³
Idle speed	900	900	900	rpm
Rated speed (without load)	2200	2200	2200	rpm
Engine output	36.5	36.5	36.5	kW
Fuel consumption 60 VDI duty cycles/h	3.2	3.8	4.3	kg/h

3.7 EN norms

Noise emission level

– DFG/TFG 316/320: 82 dB(A)*
– DFG/TFG 425/430: 82 dB (A)*
– DFG/TFG 435: 82 dB(A)*

*+/- 3 dB(A) depending on the truck's equipment

in accordance with 12053 as harmonised with ISO 4871.

➔ The noise emission level is calculated in accordance with standard procedures and takes into account the noise level when travelling, lifting and when idle. The noise level is measured at the level of the driver's ear.

Vibration

– DFG/TFG 316/320: 0,79 m/s²
– DFG/TFG 425/430/435: 0,79 m/s²

– DFG/TFG 316/320 with comfort seat: 0,39 m/s²
– DFG/TFG 425/430/435 with comfort seat: 0,39 m/s²

in accordance with EN 13059.

➔ The internal accuracy of the measuring chain for at 21 °C at ± 0,02 m/s². Further deviations may occur in particular through the positioning of the sensor and different driver weights.

➔ The vibration acceleration acting on the body in its operating position is the linearly integrated, weighted acceleration in the vertical axis according to the standard. It is calculated when travelling over thresholds at constant speed (standard truck version). These recordings were taken on a single occasion for the truck and must not be confused with the human vibrations of the operator directive. The manufacturer offers a special service to measure these human vibrations, see page 241.

Electromagnetic compatibility (EMC)

The manufacturer confirms that the truck adheres to the limits for electromagnetic emissions and resistance as well as the static electricity discharge test in accordance with EN 12895 as well as the standardised instructions contained therein.

➔ No changes to electric or electronic components or their arrangement may be made without the written agreement of the manufacturer.

⚠ **WARNING!**

Medical equipment can be damaged by non-ionised radiation

Electrical equipment on the truck emitting non-ionised radiation (e.g. wireless data transmission) can affect operators' medical equipment (pacemakers, hearing aids etc.) and result in malfunctions. Consult a doctor or the manufacturer of the medical equipment to clarify whether it can be used near the industrial truck.

3.8 Conditions of use

➔ Air pressure, air temperature and air humidity can have a negative effect on the engine performance available.

Limited use at great altitudes: An increase in altitude of 1000 m leads to a reduction in performance of around 10% due to the reduced air pressure.

Ambient temperature

– During operation -20 °C to 40 °C

➔ Special equipment and authorization are required if the truck is to be used continually in conditions of extreme temperature fluctuations or condensing air humidity.

3.9 Electrical Requirements

The manufacturer certifies compliance with the requirements for the design and manufacture of electrical equipment, according to EN 1175 "Industrial Truck Safety - Electrical Requirements", provided the truck is used according to its purpose.

4 Identification Points and Data Plates

Warnings and notices such as capacity charts, strap points and data plates must be legible at all times. Replace if necessary.

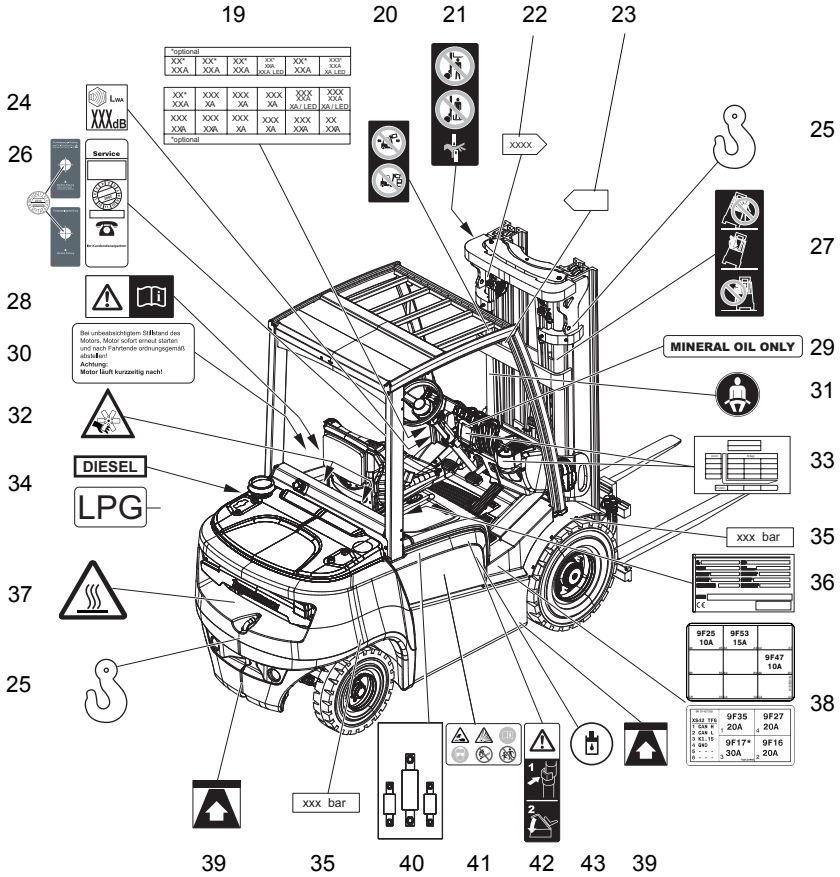

Item	Description
19	Fuses on the panel wall
20	Do not travel with raised load / mast tilted forward with a raised load prohibited
21	Do not stand on load handler / Do not stand under load handler / Risk of trapping when mast moves
22	Left-hand lift limit
23	Right-hand lift limit
24	Noise level
25	Attachment points for loading by crane
26	Inspection plaque
27	Tip-over warning, no passengers
28	Observe the operating instructions
29	Only add mineral oil
30	The engine continues to run
31	Wear seat belt
32	Risk of crushing by the moving fan (in the engine compartment)
33	Rated capacity
34	Fuel
35	Tyre pressure
36	Truck data plate; under the engine cover (not shown)
37	Hot surface
38	Fuses under the engine cover
39	Jacking points
40	Fuses on the battery
41	Warning symbols on the battery
42	Open the engine cover
43	Hydraulic oil specification
	Serial number, engraved in the chassis below the engine cover

LPG container marking points

Item	Model
34	Fuel
44	Maximum permissible fill of LPG: 80% of tank volume
45	Risk of shearing / risk of crushing

4.1 Data plate

The illustration shows the standard version for EU member states. The data plate may differ in other countries.

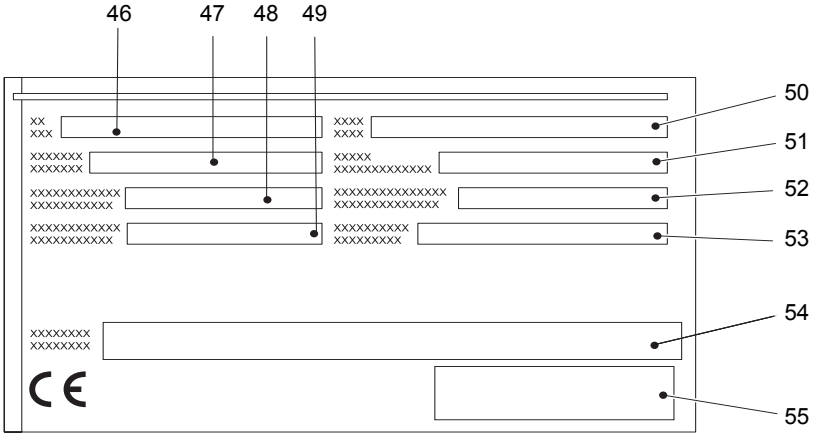

Item	Component	Item	Component
46	Type	51	Year of manufacture
47	Serial number	52	Load centre distance (mm)
48	Rated capacity (kg)	53	Net weight in kg
49	Output	54	Manufacturer
50	Option	55	Manufacturer's logo

For queries regarding the truck or ordering spare parts always quote the truck serial number (47).

4.2 Truck capacity plate

⚠ CAUTION!

Accident risk from fork replacement

If you replace the forks with ones that differ from the originals, the capacity will change.

▶ When replacing the forks you must attach an additional capacity plate to the truck.

▶ Trucks supplied without forks are given a capacity plate for standard forks (length: 1150 mm).

The capacity plate (33) gives the capacity Q (in kg) of the truck for a vertical mast. A table indicates the maximum capacity with a given load centre distance D (in mm) and the required lift height h_3 (in mm).

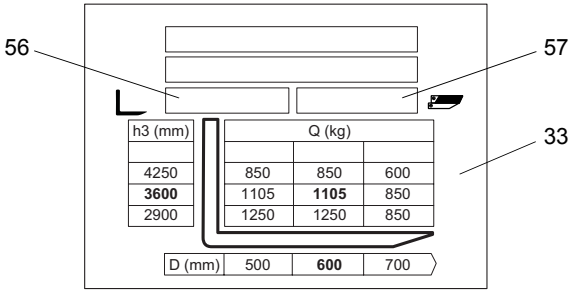

The truck capacity plate specifies the type and serial number of the truck and indicates the capacity with the fork arms (●) (56) or the fork extensions (○) (57) in as-delivered condition.

Capacity plate version in accordance with Australian guidelines (58)

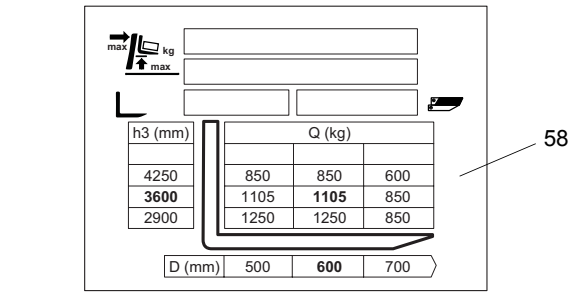

Example of how to calculate the maximum capacity

With a load centre distance (D) of 600 mm and a maximum lift height of (h_3) 3600 mm the max. capacity (Q) is 1105 kg.

Lift height limits

The arrow shaped markings (22 and 23) on the inner and outer masts show the operator when the prescribed lift limits have been reached.

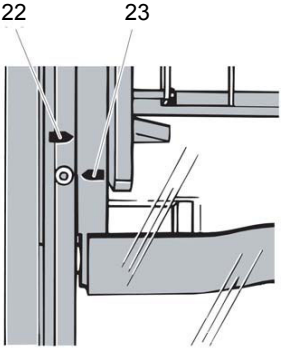
22
23

4.3 Attachment capacity plate

The attachment capacity plate is next to the truck capacity plate and gives the truck capacity Q (in kg) in conjunction with the attachment and the specified fork arms (●) (59) and where applicable fork extensions (○) (60).

The model name and/or serial number for the attachment indicated on the attachment capacity plate must match the data plate of the attachment.

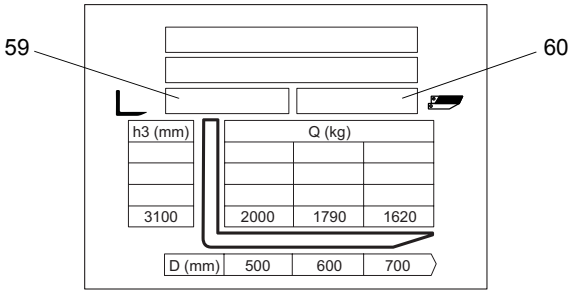

4.3.1 Attachment with More Than 100 mm Side Shift

The capacity plate of the attachment with more than 100 mm possible side shift for a current working position in the centre position (61) or pushed out offset to max. 100 mm side shift is affixed next to the truck capacity plate.

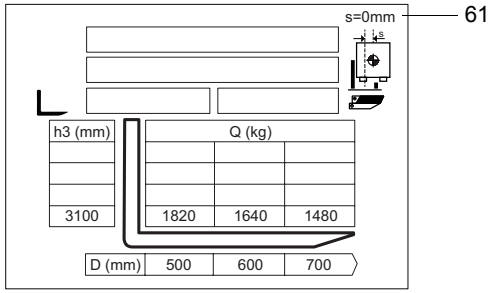

⚠ WARNING!

Risk of accident from offset load centre of gravity

The capacity of the truck is reduced when using side shifts that are more than 100 mm outside the truck centre.

▶ Note the capacity plate with the reduced capacity.

The capacity plate of the attachment with more than 100 mm possible side shift for a current clear offset working position with 100 mm side shift pushed out (62) is affixed separately to the other capacity plates.

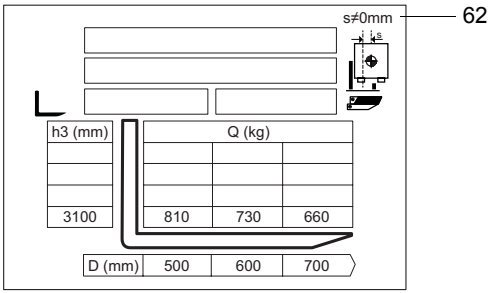

5 Stability

The truck's stability has been tested according to latest technological standards. These take into account the dynamic and static tipover forces that can occur if used correctly.

Stability can also be affected by the following factors:
– Tyre type
– Mast
– Attachment
– Transported load (size, weight and centre of gravity)

⚠ WARNING!

Loss of stability can cause accidents
Changing the components can alter the stability.

5.1 Wind loads

Wind forces can affect the stability of a truck when lifting, lowering and transporting loads with large surface areas.

Light loads must be especially secured when they are subjected to wind forces. This will prevent the load from sliding or falling.

Stop the truck in both cases.

C Transport and Commissioning

1 Transport

Transport can be carried out in two different ways, depending on the height of the mast and the local conditions.

– Vertically, with the mast assembled (for low heights)
– Vertically, with the mast dismantled (for large heights), all mechanical connections and hydraulic lines between the basic truck and the mast separated.

2 Truck laden

2.1 Centre of gravity of the truck

⚠ WARNING!

An altered centre of gravity can result in tipovers when cornering.
The overall centre of gravity can vary depending on the truck's equipment (especially the mast version).
For trucks without a mast the centre of gravity will move significantly in the direction of the counterweight.
▶ Drive carefully and with modified speed to avoid tipping over.

The picture shows the approximate centre of gravity location.

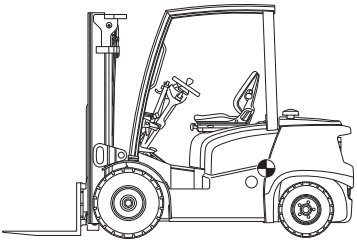

2.2 Lifting the truck by crane

⚠ DANGER!

Crane lifting gear can tear, resulting in accidents

- ▶ Only use crane lifting gear with sufficient capacity.
- ▶ Loading weight = truck net weight.
- ▶ The mast must be tilted back fully.
- ▶ The crane lifting gear on the mast must have a minimum clear length of 2 m.
- ▶ Crane slings should be fastened in such a way that they do not come into contact with any attachments or the overhead guard when lifting.
- ▶ Do not stand under a swaying load.
- ▶ The truck must only be handled by people who are trained in using lifting accessories and lifting tools.
- ▶ Wear safety shoes when loading by crane.
- ▶ Do not walk into or stand in a hazardous area.
- ▶ Always attach the crane lifting gear to the prescribed strap points and prevent them from slipping.

⚠ WARNING!

All persons involved in loading by crane must be trained

Incorrect crane loading procedures due to untrained personnel can cause the truck to fall. There is a risk of injury to personnel and a risk of material damage to the truck.

- ▶ Loading must only be performed by specialist personnel trained for this purpose. The specialist personnel must be instructed in securing loads on road vehicles and handling load securing devices. In each case correct measurements must be taken and appropriate safety measures applied.

⚠ CAUTION!

The mast can get damaged

- ▶ Loading by crane is only intended for the initial transport before the truck is used for the first time.
- ▶ Loading must be carried out by specially trained staff in accordance with recommendations contained in Guidelines VDI 2700 and VDI 2703

➔ Truck net weight: see page 38.

Lifting the truck by crane

Requirements

– Park the truck securely, see page 103.

Procedure

- Fasten the crane slings securely to the attachment points (64) and (63).
- Raise and load the truck.
- Lower and deposit the truck carefully (see page 103).
- Secure the truck with wedges to prevent it from rolling away.

This concludes the loading by crane.

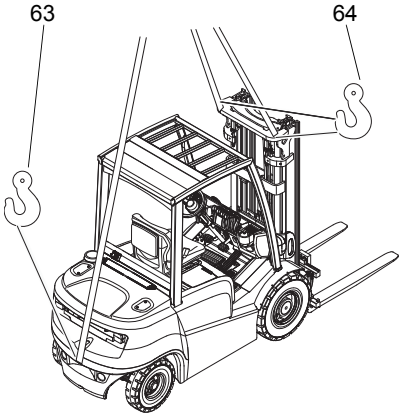

2.3 Loading with another industrial truck

⚠ WARNING!

The truck can be damaged

The truck to be loaded can be damaged when loading with another industrial truck.

▶ Only trained specialist personnel should load the truck.
▶ Use only trucks with sufficient capacity for loading.
▶ Only for loading and unloading.
▶ The forks of the second industrial truck must be sufficiently long
▶ Transporting over long distances prohibited.

Loading the truck with a second industrial truck

Requirements

– Park the truck securely, see page 103.

Procedure

- Raise the truck with the forks at the side between the axles.
- Raise the truck slightly and make sure it is securely positioned on the forks. If necessary adjust or secure the forks with stops.
- Carefully load/unload the truck, see page 112.
- Lower the truck slowly onto the ground and prevent it from rolling away.

The truck is now loaded.

3 Securing the truck during transport

⚠ WARNING!

Accidental movement during transport

Improper fastening of the truck and mast during transport can result in serious accidents.

- ▶ Loading must only be performed by specialist personnel trained for this purpose. The specialist personnel must be instructed in securing loads on road vehicles and handling load securing devices. In each case correct measurements must be taken and appropriate safety measures applied.
- ▶ The truck must be securely fastened when transported on a lorry or a trailer.
- ▶ The lorry or trailer must have fastening rings.
- ▶ Use wedges to prevent the truck from moving.
- ▶ Use only fastening belts with sufficient strength.
- ▶ Use non-slip materials to securing the load aids (pallet, wedges, ...) e. g. non-slip mats.

Securing with a mast

Securing without a mast

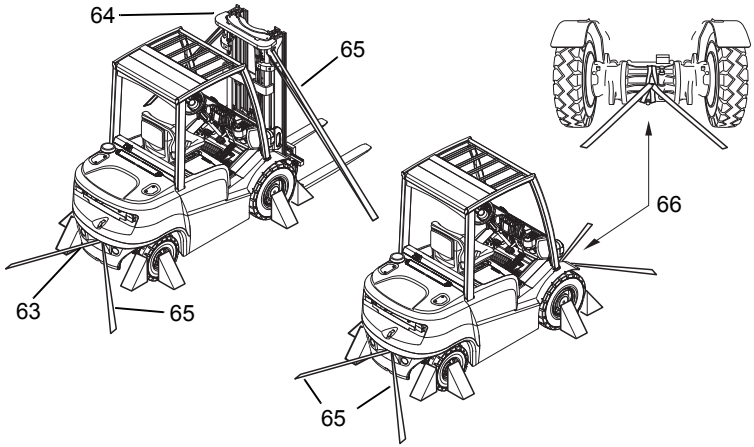

Securing the industrial truck for transport

Requirements

– Position the industrial truck securely on a lorry or trailer, see page 103.

Tools and Material Required

– 2 fastening belts with a tensioner
– Retaining wedges

Procedure

- Secure the truck with the fastening belt (65) at the top cross member of the mast (64) and the trailer coupling (63) or over the front axle cross member (66) and the trailer coupling (63).
- Tighten the fastening belts (65) with the tensioner.

The truck is now secured for transport.

4 Using the Truck for the First Time

Safety Instructions for Assembly and Commissioning

⚠ WARNING!

Incorrect assembly can result in accidents

The assembly of the truck at the application site, commissioning and operator training must only be performed by the manufacturer's customer service representatives who have been specially trained for these tasks.

Preparing for operation after delivery or transport

Procedure

- Check the equipment is complete.
- Check the engine oil level.
- Check the hydraulic oil level.
- Check the transmission oil level.
- Check the brake oil level.
- Check the battery connections.
- Check the battery acid level (not for maintenance-free batteries).

The truck can now be started, see page 79.

D Fuelling the Truck

1 General

1.1 Safety regulations for handling diesel fuel and LPG

⚠ WARNING!

An unsecured industrial truck can cause accidents

The truck can suddenly start to move.

▶ Park the truck securely before filling it up or replacing the LPG bottle, see page 103.

⚠ WARNING!

Accident risk from ignition

▶ Fuels and liquefied petroleum gas can ignite.

▶ Smoking, naked flames and other ignition sources are strictly prohibited in the immediate vicinity when handling fuels and LPG.

▶ Labels indicating the hazard are must be positioned where they are clearly visible.

▶ Do not store flammable materials in this area.

▶ Powder fire extinguisher must be provided within easy reach of the filling area.

▶ Use only category A, B or C type powder fire extinguishers to fight LPG fires.

▶ Bring any unsealed LPG bottles immediately outside, attach visible markings and notify the supplier.

Storage and Transport

The diesel and LPG storage and transport devices must comply with statutory requirements.

If there is no filling station available, the fuel must be stored and transported in clean, approved containers.

The contents must be clearly indicated on the container.

NOTE

Fuel can cause environmental damage

▶ Bind any spilled diesel fuel with suitable methods.

▶ Then dispose of the diesel and fuel filter in accordance with environmental regulations.

Fuel filling and LPG bottle replacement personnel

Personnel filling the trucks or replacing LPG bottles must have sufficient knowledge of the nature of fuels to ensure safe operation.

⚠ CAUTION!

Liquid gas can cause frostbite

- ▶ Liquid gas produces frostbite when it comes into contact with bare skin.
- ▶ Avoid direct contact with the skin.
- ▶ Wear gloves.

Filling up LPG containers

LPG containers remain attached to the truck and are filled up at LPG stations. Always follow the instructions of the tank system and LPG container manufacturer as well as statutory and local regulations when filling up.

NOTE

Instructions for the safe operation of LPG systems

- ▶ All maintenance and repair work on LPG systems and containers should be carried out by qualified personnel who have been trained to work on LPG systems.
- ▶ The owner must comply with all legal requirements, technical standards and health and safety regulations applicable to liquid gas.
- ▶ Before starting work, the operator must check that all accessible components of the LPG system are in good working order, in accordance with the regulations of the country of use.
- ▶ Do not operate the truck if there is any damage, corrosion, wear or degradation to individual components of the LPG system.

1.2 LPG system relief valve

⚠ DANGER!

Danger from escaping liquid gas.

Liquid gas can escape from faulty gas hoses.

▶ Use only gas bottles with an integrated line break safety valve.

▶ The gas bottle connection is also fitted with a line break safety valve which prevents the gas from escaping accidentally during operation.

▶ When replacing, always use a gas bottle connection with an integrated line break safety valve.

LPG powered trucks are fitted with a relief valve. This is located on the rear cover next to the gas bottle.

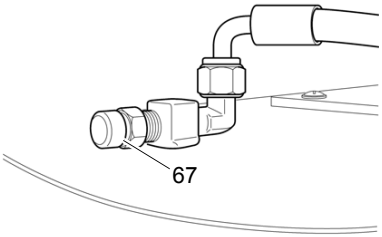

– In the event of a fault the pressure in the gas system is restricted to a maximum level. The relief valve is fitted with a plastic cover (67).
– When the valve is activated the plastic cover comes off, thereby clearly indicating a fault in the gas system.
– In this case the truck must not be operated.
– The gas system must be check by suitably qualified and trained personnel.
– The operator must check that the plastic cover is in place each time he uses the truck.

2 Adding diesel

⚠ **CAUTION!**

Air in the fuel system will result in malfunctions.

▶ Never allow the fuel tank to run dry.

2.1 Fuelling

⚠ **WARNING!**

Diesel fuel can be hazardous

▶ Diesel fuel can cause irritation if it comes into contact with the skin. Rinse any affected areas thoroughly.

▶ If it comes into contact with the eyes rinse them immediately with flowing water and call for a doctor.

▶ Wear safety gloves when handling diesel fuels.

NOTE

▶ Fuelling must always be performed in designated areas by trained and authorised personnel.

NOTE

▶ Capacity: DFG 316/320 = 42 l.
Capacity: DFG 425-435 = 50 l.

▶ Use only diesel in accordance with DIN EN 590 or ASTM 975 with a cetane rating above 45.

NOTE

Engine damage caused by diesel fuel with a high sulphur content

Using diesel fuel with a high sulphur content (0.5 % (5,000 ppm) to 1.0 % (10,000 ppm)) cause the engine to wear more quickly.

▶ Replace the engine oil and the filter every 250 operating hours.

▶ Using diesel fuel with a sulphur content above 1.0% (10,000 ppm) can damage the engine.

NOTE

Using diesel fuel with a high sulphur content

The grade and the sulphur content in percent (in ppm) of the diesel fuel used must fulfil all applicable environmental regulations in the country in which the engine is used.

▶ Replace the fuel filter every 500 operating hours.

▶ The use of diesel fuel with a sulphur content below 0.10% (1,000 ppm) is strongly recommended.

NOTE

Engine damage due to contaminated diesel fuel

If heavily contaminated fuels are used, it may be necessary to reduce the fuel filter change interval from 1,000 to 500 operating hours.

2.1.1 Fuelling the tank system

Procedure

- Park the truck securely before fuelling, see page 103.
- Unscrew the filler cap (68).
- Insert the pump nozzle into the open tank filler neck.
- Add the fuel.
- Do not overfill the tank.
- Screw the cap (68) back on tightly after fuelling.

Fuelling is now complete.

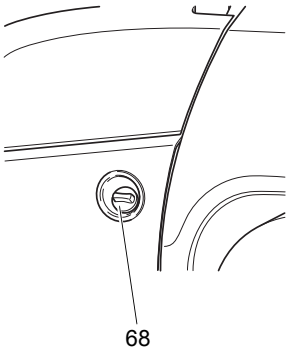

2.1.2 Fuelling with fuel containers

Procedure

- Unscrew the filler cap (68) and open the fuel container.
- Fit the spout onto the fuel container.
- Insert the spout into the open tank filler neck.
- Make sure the fuel container and spout are connected tightly to each other.
- Raise the fuel container carefully and slowly add the diesel.
- Do not overfill the tank.
- Screw the cap (68) back on tightly after fuelling.

Fuelling is now complete.

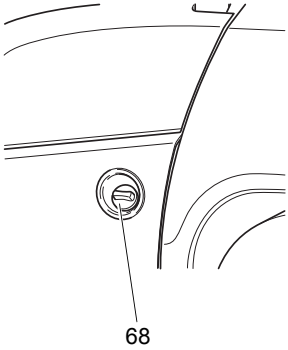

2.2 Fuel display (DFG only)

2.2.1 Display unit

When the spare indicator (69) is lit, the reservoir must be filled.

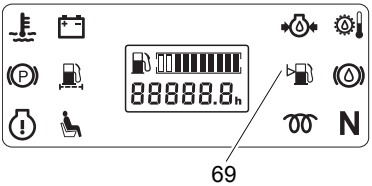

3 LPG containers

Only use liquid gas that complies with DIN 51622 or comparable national regulations.

3.1 LPG bottles

DANGER!

Risk of explosion

▶ The LPG bottle must only be replaced at designated areas by trained and authorised personnel.

CAUTION!

Using unsuitable LPG bottles can cause accidents.

▶ Use only approved LPG bottles.

▶ The LPG bottle must always rest on an engaged bottle holder so that the hose connection of the shutoff valve is facing vertically down.

▶ For bottle types of other countries note the national regulations.

▶ Note the indications and markings on the LPG bottle.

3.1.1 Using an LPG bottle

Replacing the LPG bottle

Procedure

- Park the truck securely before changing the LPG bottle, see page 103
- Close the shut-off valves (70) securely.
- Start the motor and run it in neutral until the LPG system is empty.

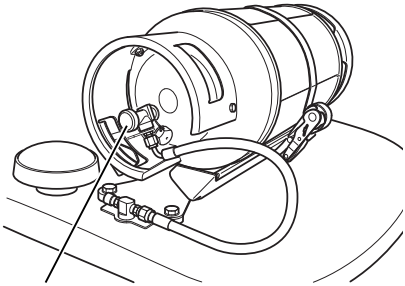

Removing the LPG bottle

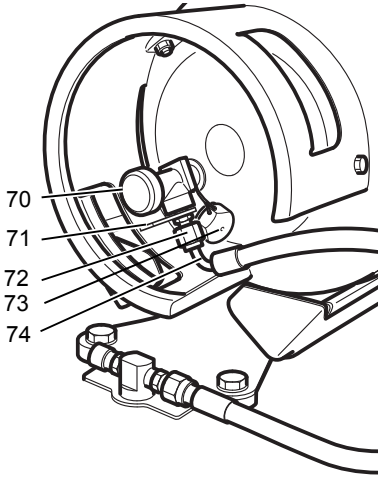

⚠ CAUTION!

The connection has a left-hand thread.

Procedure

- Unscrew the union nut (72) while holding against the handle (71).
- Remove the hose (74) and immediately screw the valve cap onto the empty LPG bottle.
- Pull the latch (76) downwards.
- Turn the clamping lever (75) upwards.
- Unhook the tensioning belt from the bracket and place it on the LPG bottle.
- Carefully remove the LPG bottle from the bracket (77) and place it down securely.

Inserting a new LPG bottle

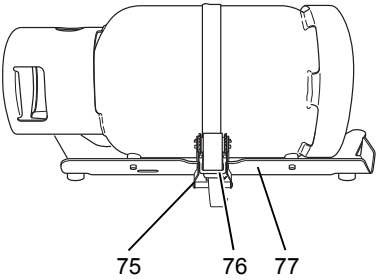

Procedure

- Place the LPG bottle in the bracket (77).
- ➔ Note the downward position of the connection.
- Place the tensioning belt around the LPG bottle.
- Align the hose connection upwards.
- Place the tensioning belt around the LPG bottle and hook it into the bracket.
- Manually pull out the end of the tensioning belt and place it on the LPG bottle.
- Tension the locking mechanism on the tensioning belt by pulling the lock while at the same time turning the clamping lever (75) over.
- Apply the clamping lever (75) several times until the bottle is securely locked in position.
- Unscrew the valve cap (73).
- Fit the hose (74) in accordance with instructions.
- Tighten the union nut (72) while holding against the handle (71).
- Carefully open the shut-off valve (70).
- Check the hose connection for leaks using a foam-forming agent.

The replacement is now complete.

3.2 LPG tank (○)

Refillable liquid gas tanks contain a dispensing valve (79), a filling stop valve (81), a relief valve (80) and a display (78).

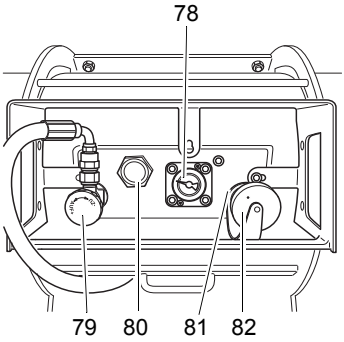

Filling refillable liquid gas tanks (optional equipment).

Requirements

– Note all guidelines and regulations concerning the filling of LPG bottles on the LPG pump.

Procedure

- Close the dispensing valve (79).
- Unscrew the cap (82) of the filling stop valve (81).
- Screw the filling connection of the liquid gas pump onto the filling stop valve (81).

➔ Fuelling automatically ends when the tank's capacity has been reached.

- After fuelling, unscrew the filling connection and screw the cap (82) of the filling stop valve (81) back on.

E Operation

1 Safety Regulations for the Operation of Forklift Trucks

Driver authorisation

The truck may only be used by suitably trained personnel, who have demonstrated to the proprietor or his representative that they can drive and handle loads and have been authorised to operate the truck by the proprietor or his representative.

Operator's rights, obligations and responsibilities

The operator must be informed of his duties and responsibilities and be instructed in the operation of the truck and shall be familiar with the operating instructions.

Unauthorised use of truck

The operator is responsible for the truck during the time it is in use. The operator must prevent unauthorised persons from driving or operating the truck. Do not carry passengers or lift other people.

Damage and faults

The supervisor must be informed immediately of any damage or faults to the truck or attachment. Trucks which are unsafe for operation (e.g. wheel or brake problems) must not be used until they have been rectified.

Repairs

The operator must not carry out any repairs or alterations to the truck without authorisation and the necessary training to do so. The operator must never disable or adjust safety mechanisms or switches.

Hazardous area

⚠ WARNING!

Risk of accidents/injury in the hazardous area of the truck

A hazardous area is defined as the area in which people are at risk due to travel or lifting operations of the truck, its load handler or the load. This also includes the area within reach of falling loads or lowering/falling operating equipment.

▶ Instruct unauthorised persons to leave the hazardous area.

▶ In case of danger to third parties, give a warning signal in good time.

▶ If unauthorised persons are still within the hazardous area, stop the truck immediately.

⚠ WARNING!

Falling objects can cause accidents

Falling objects can injure the operator while the truck is being operated.

▶ The operator must remain within the protected area of the overhead guard while the truck is being operated.

Safety devices, warning signs and warning instructions

Safety devices, warning signs (see page 36) and warning instructions in the present operating instructions must be strictly observed.

⚠ CAUTION!

Reduced headroom can cause injuries

Trucks with reduced headroom are equipped with a warning label within the operator's line of sight.

▶ The max. recommended body size indicated on this warning sign must be observed.

▶ The headroom is also reduced when you wear a protective helmet.

---

2 Displays and Controls

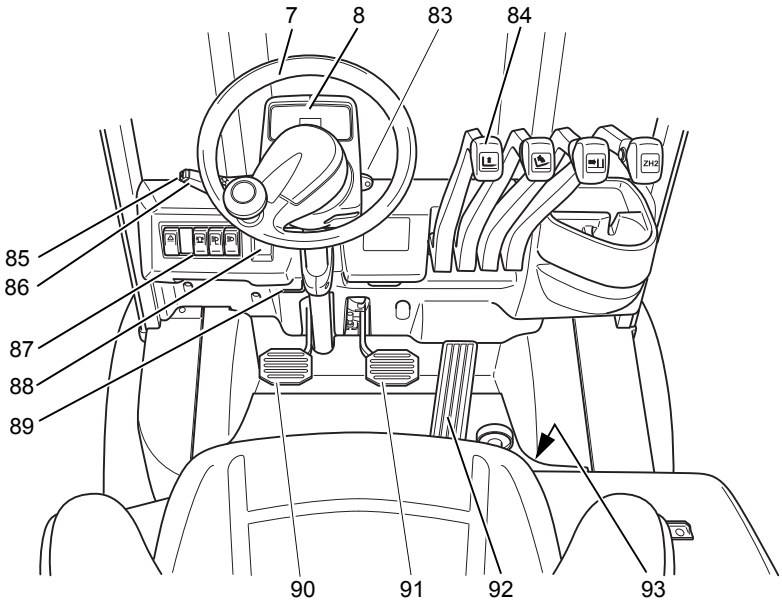

Item	Control/ display		Function
7	Steering wheel	●	Steering the industrial truck.
8	Display unit	●	Warning and information message display
83	Key switch	●	Switches control current on and off, and starts the engine. Removing the key prevents the truck from being switched on by unauthorised personnel.
84	SOLO-PILOT	●	Controls the following functions: – Load handler raise/lower – Mast forward/reverse tilt – Side shift left/right (○) – Auxiliary hydraulics (○)
85	Horn	●	Activates an audible warning.
86	Travel direction switch	●	Selects travel direction/neutral position.
87	Options switches	●	Options
88	Parking brake switch	●	Activates/deactivates the parking brake.
89	Steering-column adjusting lever	●	Adjusts the steering column tilt.
90	Slow-travel/brake pedal	●	1st zone: controls slow travel. 2nd zone: applies service brake.
91	Brake pedal	●	When pressed, the truck brakes to a halt.

Item	Control/ display		Function
92	Accelerator pedal	●	Infinitely variable travel-speed control.
93	Battery isolator	●	Disconnects the battery from the on-board power supply and switches off all electrical functions.

●= Series equipment	○= Optional equipment

2.1 Control panel with display unit

The control panel display unit shows the operating data, the battery charge, the service hours and error details and information. Icons in the display unit act as warning indicators.

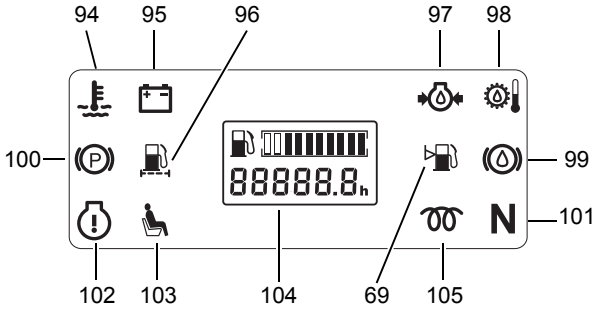

Item		Control / Display		Function
69		Fuel/water separator (DFG)	●	Fuel/water separator is full, see page 184.
94		Coolant temperature	●	Coolant temperature too high, see page 184.
95		Charge current indicator	●	Battery not charging, see page 184.
97		Engine oil pressure display	●	Engine oil pressure too low, see page 184.
98		Transmission oil temperature	●	Transmission oil temperature too high, see page 184.
99		Brake oil warning indicator	●	Brake oil level too low, see page 184.
100		Parking brake warning indicator	●	Parking brake activated, see page 109.
101	N	Neutral indicator lamp	●	Transmission is in neutral, see page 105.
102		Engine indicator (TFG)	●	Engine controller error, see page 184.

Item		Control / Display		Function
103		Seat switch warning indicator	●	Seat switch not closed – Truck operational, but driver's seat not occupied Time monitoring expired – Restart the truck
104		Service hour display	●	Service hours are counted when the engine is running.
96		Fuel tank reserve indicator (DFG)	●	Fuel tank must be filled.
105		Pre-heat indicator lamp	●	Engine is being preheated (DFG only).

●= Series equipment	○= Optional equipment

Troubleshooting see page 184.

2.1.1 Instrument panel switches

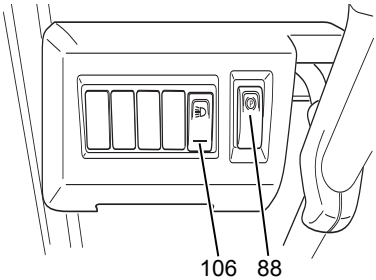

	Switch	Function	
	Parking brake (88)	Switches the parking brake on and off.	●
	Front work lights (106)	Switches the front work lights on and off.	●
	Rear work lights	Switches the rear work lights on and off.	○
	Beacon	Switches the beacon on and off.	○
	Hazard warning system	Switches the hazard warning system on and off.	○
	Lighting (Set A, StVZO (German road traffic regulations))	Switches the lighting on and off.	○
	Particle filter (DFG)	Information on the particle filter, see page 155.	○
● = Standard equipment		○= Optional equipment	

➔ The arrangement of optional switches is variable and not assigned to any fixed position.

2.1.2 Switches in front of the front windscreen (○)

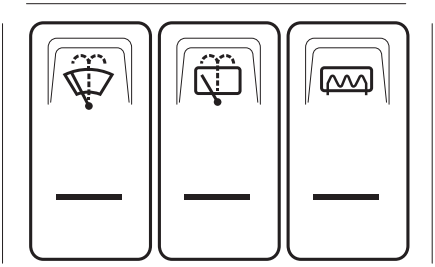

	Display	Function
	Front windscreen wiper	Switches front windscreen wiper on and off.
	Rear windscreen wiper	Switches rear windscreen wiper on and off.
	Rear windscreen heating	Switches rear windscreen heating on and off.

3 Description of the Display and Controls on the Armrest (○)

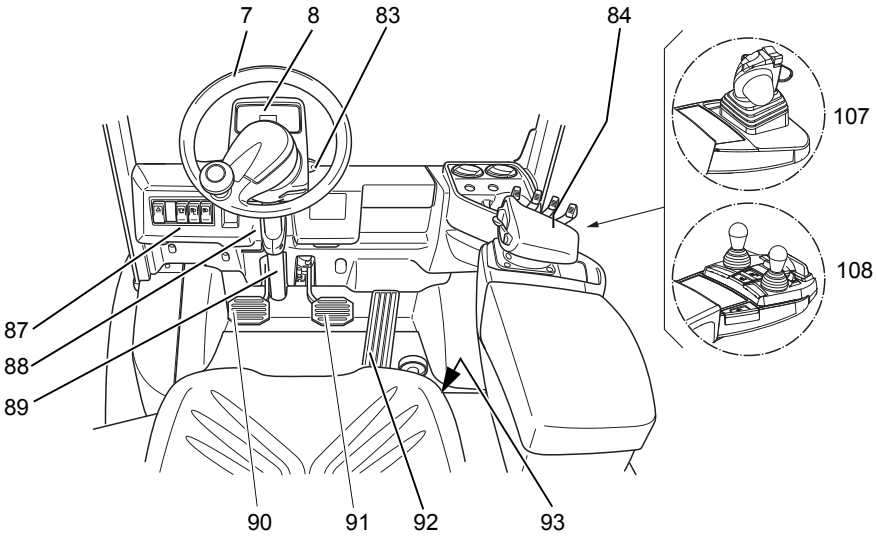

Item	Control/ display		Function
7	Steering wheel	●	Steering the industrial truck.
8	Display unit	●	Warning and information message display
83	Key switch	●	Switches control current on and off, and starts the engine. Removing the key prevents the truck from being switched on by unauthorised personnel.
84 107 108	SOLO-PILOT MULTI-PILOT DUO-PILOT	●	Controls the following functions: – Load handler raise/lower – Mast forward/reverse tilt – Side shift left/right (○) – Auxiliary hydraulics (○)
87	Options switches	●	Options
88	Parking brake switch	●	Activates/deactivates the parking brake.
89	Steering-column adjusting lever	●	Adjusts the steering column tilt.
90	Slow-travel/brake pedal	●	1st zone: controls slow travel. 2nd zone: applies service brake.
91	Brake pedal	●	When pressed, the truck brakes to a halt.
92	Accelerator pedal	●	Infinitely variable travel-speed control.
93	Battery isolator	●	Disconnects the battery from the on-board power supply and switches off all electrical functions.

●= Series equipment	○= Optional equipment

3.1 Pilots

Item	Control/ display		Function
84	Basic hydraulic functions lever	●	Lever for operating the basic lift/lower hydraulic functions
84	Auxiliary hydraulics 2/ auxiliary hydraulics 3 lever	○	Lever for operating the auxiliary hydraulics 2/auxiliary hydraulics 3 hydraulic functions with acknowledgement button
110	Basic hydraulic functions lever	●	Lever for operating the basic tilt hydraulic functions
109	Side shift/auxiliary hydraulics 1 optional button/ lever	●	Button for side shift or auxiliary hydraulics 1
86	Travel direction switch	●	Selects travel direction / neutral position
111	"Horn" button	●	Activates an audible warning
112	Auxiliary hydraulics 2 button/lever	○	Button/lever for operating the auxiliary hydraulics 2 hydraulic functions without acknowledgement button
113	Acknowledgement button	○	Additional operating means for hydraulic functions requiring acknowledgement

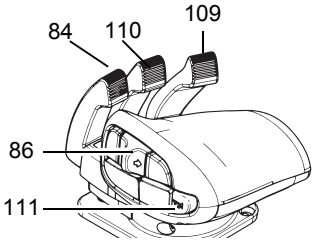

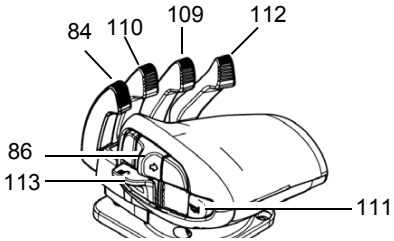

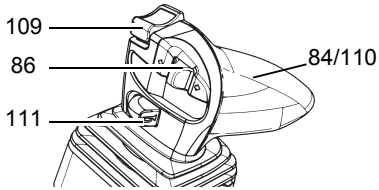

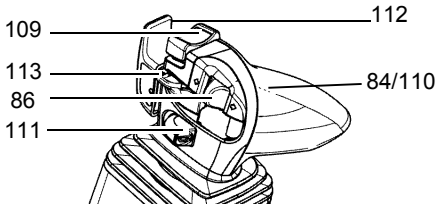

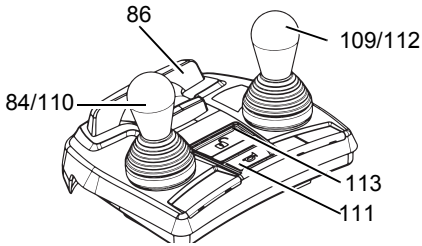

3.2 Function symbols for the Pilots

The symbols shown are examples. The actual direction of movement of the hydraulic functions must be determined from the labels on the levers of the Pilots.

Symbol	Meaning
	Marking: Second function of a hydraulic function Selection via toggle function
	Toggle function Switch between main functions and second functions for hydraulic functions
	Marking: Hydraulic function requiring acknowledgement
	Acknowledgement button Hydraulic function requiring acknowledgement can then be operated within 2 seconds.
	Lift
	Tilt
	Sideshift
	Fork positioner
	Clamp
	Reach fork
	Telescopic fork
	Rotate
	Double lift
	Tip

Symbol	Meaning
	Lock
	Crane
	Bucket
	Load holder
	Folding fork
ZH1	Adapters ZH1 to ZH4 (example symbol: ZH1)
2	Changing attachments 1 to 4 (example: attachment 2)

The pictogram shows the direction of movement that is executed when the operator pulls the lever in direction (R).
The counter-movement of the work function is achieved by the operator pushing the lever accordingly.

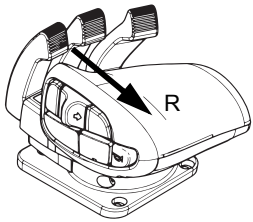

For controls that operate at right angles to the travel direction, the function is shown with the actuation to the left (S) from the operator's perspective. The counter-movement of the work function is achieved by actuating the lever to the right from the operator's perspective.

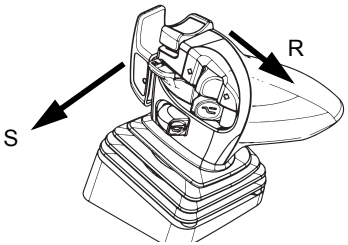

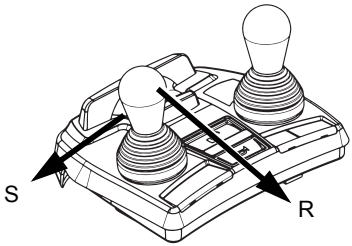

3.3 Control panel with display unit

The control panel display unit shows the operating data, the battery charge, the service hours and error details and information. Icons in the display unit act as warning indicators.

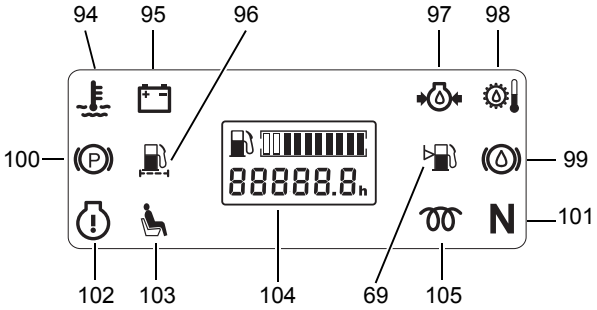

Item		Control/ display element		Function
69		Fuel tank reserve indicator (DFG)	●	Fuel tank must be filled.
94		Coolant temperature	●	Coolant temperature too high, see page 184.
95		Charge current warning indicator	●	Battery not charging, see page 184.
96		Fuel/water separator (DFG)	●	Fuel/water separator is full, see page 184.
97		Engine oil pressure display	●	Engine oil pressure too low, see page 184.
98		Transmission oil temperature	●	Transmission oil temperature too high, see page 184.
99		Brake oil warning indicator	●	Brake oil level too low, see page 184.
100		Parking brake warning indicator	●	Parking brake activated, see page 109.
101	N	Neutral indicator lamp	●	Transmission is in neutral, see page 105.
102		Indicator lamp	●	Flashing: Engine controller error (TFG), see page 184. Permanently lit: TCU error

Item		Control/ display element		Function
103		Seat switch warning indicator	●	Seat switch not closed – Truck operational, but driver's seat not occupied Time monitoring expired – Restart the truck
104		Service hours display	●	Service hours are counted when the internal combustion engine is running.
105		Pre-heat indicator lamp	●	Engine is being preheated (DFG only).

●= Series equipment	○= Optional equipment

Troubleshooting see page 184.

3.3.1 Instrument panel switches

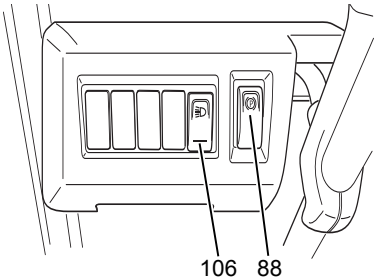

	Switch	Function	
	Parking brake (88)	Switches the parking brake on and off.	●
	Front work lights (106)	Switches the front work lights on and off.	●
	Rear work lights	Switches the rear work lights on and off.	○
	Beacon	Switches the beacon on and off.	○
	Hazard warning system	Switches the hazard warning system on and off.	○
	Lighting (Set A, StVZO (German road traffic regulations))	Switches the lighting on and off.	○
	Particle filter (DFG)	Information on the particle filter, see page 155.	○
● = Standard equipment		○= Optional equipment	

➔ The arrangement of optional switches is variable and not assigned to any fixed position.

3.3.2 Switches in front of the front windscreen (○)

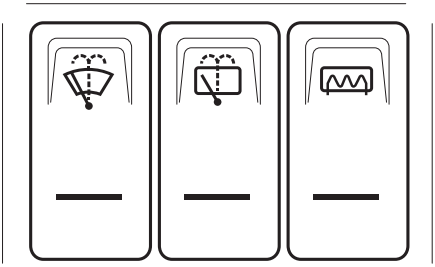

	Display	Function
	Front windscreen wiper	Switches front windscreen wiper on and off.
	Rear windscreen wiper	Switches rear windscreen wiper on and off.
	Rear windscreen heating	Switches rear windscreen heating on and off.

4 Preparing the Truck for Operation

4.1 Checks and Operations to Be Performed Before Starting Daily Work

⚠ WARNING!

Damage and other truck or attachment (optional equipment) defects can result in accidents.

If damage or other truck or attachment (optional equipment) defects are discovered during the following checks, the truck must be taken out of service until it has been repaired.

▶ Report any defects immediately to your supervisor.

▶ Mark defective truck and take out of service.

▶ Do not return the industrial truck to service until you have identified and rectified the fault.

⚠ CAUTION!

Risk of accident due to slippery surfaces

There is a risk of accident due to slipping when walking on slippery surfaces with unsuitable footwear.

▶ Wear safety shoes or sturdy footwear with non-slip soles.

▶ Use the non-slip step and the floor mat for entry and exit.

➔ Safety shoes, and where applicable additional personal protective equipment, must be worn for some activities.

⚠ CAUTION!

Checking the accelerator pedal

▶ The accelerator pedal should only be checked when the parking brake is applied and the engine is idle.

Checks before daily operation

Procedure

- Visually inspect the entire truck (in particular wheels, wheel bolts and load handler) for damage.
- Check the fork stop (114) and fork-retaining mechanism (115).

  ➔ Depending on the fork carriage, the fork-retaining mechanism (115) will be either via retaining bolts (85 Nm) or fixed stops.
- Visually inspect the hydraulic system in the visible area for damage and leaks.
- Check the driver's seat has been adjusted to the correct position.
- Test the horn and reversing buzzer (○) where applicable.
- Check that the load chart and warning notices are legible.
- Test the controls and displays.
- Test the steering.
- Make sure the load chains are evenly tensioned.

- Test the seat belt. (The belt should jam if extracted suddenly.)
- Test the seat switch: when the driver's seat is vacated, it should not be possible to operate the working hydraulics.
- Test the restraint system (○),
- Test the hydraulic functions for lifting/lowering, tilting and, if applicable, the attachment.
- Check the accelerator pedal can move freely by pressing it several times.
- Test the service brake and the parking brake: Drive off carefully and test the effectiveness of the brake pedal.
- Check the fuel supply.
- Check the fluid level of the windscreen washing system (○), see page 154.
- Check the LPG system is working correctly, see page 59.

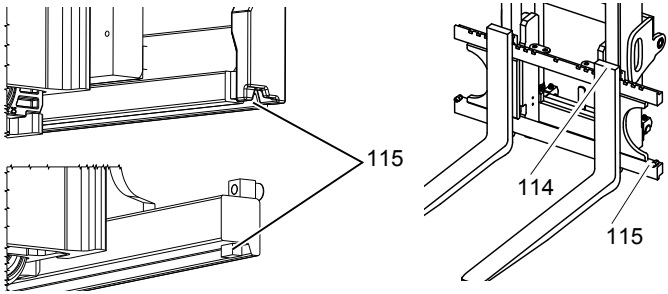

4.2 Entry and exit

⚠ CAUTION!

Risk of accident due to slippery surfaces

There is a risk of accident due to slipping when walking on slippery surfaces with unsuitable footwear.

▶ Wear safety shoes or sturdy footwear with non-slip soles.

▶ Use the non-slip step and the floor mat for entry and exit.

➔ Safety shoes, and where applicable additional personal protective equipment, must be worn for some activities.

Requirements

– Truck stationary.

Procedure

- Open the cab door (○).
- To enter and exit the cab, hold onto the handle (116). Always face the truck when entering and exiting.

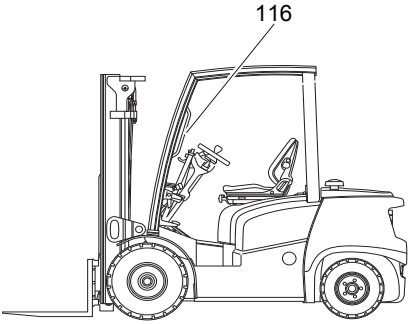

➔ Always use the entry aid (116) provided to climb onto the truck.

4.3 Trucks with reduced headroom (○)

⚠ WARNING!

An unsuitable workplace can damage your health

Failure to observe the recommended body size can cause stress and endanger the operator and may lead to lasting ill health due to an unhealthy posture and excessive strain on the operator.

▶ The operating company must ensure that truck operators do not exceed the maximum body size indicated.

▶ The operating company must check that the operators can sit in a normal and upright position without having to strain.

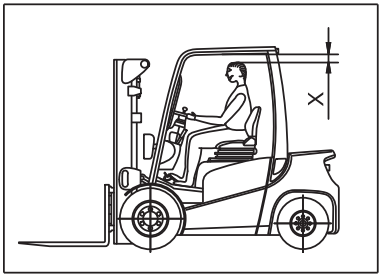

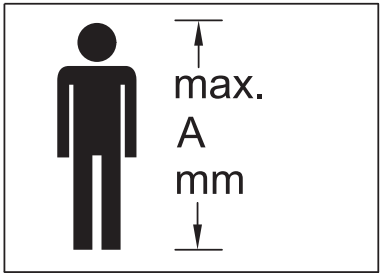

4.4 Setting up the operator position

⚠ WARNING!

Accidents can occur if the driver's seat, steering column and armrest are not engaged

The driver's seat, steering column and armrest can accidentally adjust during travel and therefore cannot be operated safely.

▶ Do not adjust the driver’s seat, steering column or armrest while travelling.

Procedure

- Before starting to travel, adjust the driver’s seat, steering column and armrest (if necessary) so that all the controls are within reach and can be applied without having to strain.
- Adjust the visibility aid equipment (mirrors, camera systems etc.) so that the working environment can be clearly seen.

4.4.1 Adjusting the driver’s seat

⚠ WARNING!

Risk of accidents and damage to health

An incorrectly adjusted seat can result in accidents and damage to health.

▶ Do not adjust the seat while driving.

▶ The seat should lock in position after adjustment.

▶ Check and, if necessary, adjust the individual driver's weight setting before starting up the truck.

Adjusting the driver's weight

NOTE

Incorrectly adjusted seat cushioning can damage your health

To achieve optimal seat damping, the driver’s seat must be adjusted according to the driver’s weight.

▶ Set the driver's weight when the seat is occupied.

Requirements

– Operator is sitting on the seat.

Procedure

- To set a heavier driver's weight, push the weight adjustment lever (119) down.
- To set a lower driver's weight, push the weight adjustment lever (119) fully up.
  - The weight adjustment lever (119) can now be moved up to the lowest driver's weight (50 kg).

➔ The driver weight setting can be checked on the scale (117).

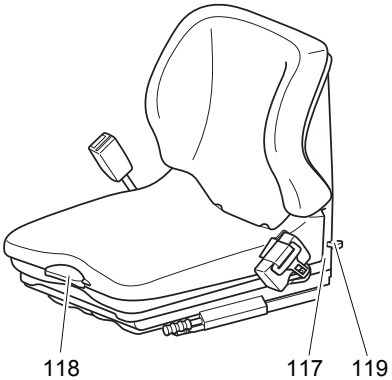

The driver’s weight is now set.

Adjusting the backrest

Requirements

– Operator is sitting on the seat.

Procedure

- Pull the lever (118) up to adjust the backrest.
- Slide the seat surface forwards to adjust the angle of the backrest.
- Release the lever (118) again. The backrest is locked.

The backrest has now been now adjusted.

Adjusting the seat position

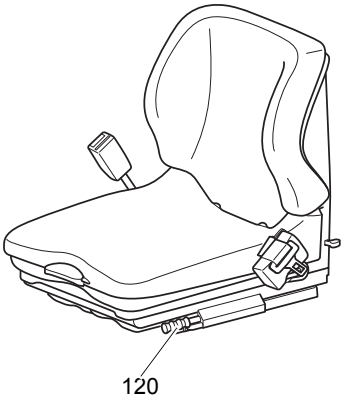

⚠ CAUTION!

An unsecured driver's seat can cause injury

An unsecured driver's seat can slide out of its guide during travel, resulting in accidents.

▶ The driver's seat must be locked in position.

▶ Do not adjust the driver’s seat while travelling.

Requirements

– Operator is sitting on the seat.

Procedure

- Pull the seat locking lever (120) up.
- Push the driver’s seat forwards or backwards to the desired position.
- Engage the seat locking lever (120).

The seat position is now correctly set.

4.4.2 Adjusting the Driver's Seat with Armrest (○)

⚠ WARNING!

Risk of accidents and damage to health

An unsecured or incorrectly adjusted driver’s seat can result in accidents or damage to health.

▶ Do not adjust the driver’s seat while travelling.

▶ The driver’s seat should lock in position after adjustment.

▶ Check and, if necessary, adjust the individual seat setting and driver's weight setting before starting up the truck.

Adjusting the seat position

Procedure

- Sit on the driver’s seat.
- Pull up the driver’s seat locking lever (120) in the direction of the arrow.
- Push the driver’s seat forwards or backwards to the desired position.
- Engage the driver’s seat locking lever (120) in position.

The seat position is now correctly set.

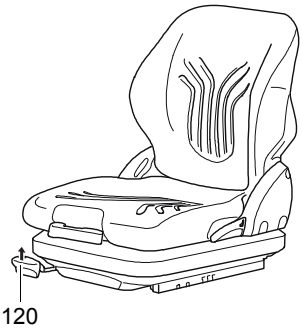

Adjusting the driver's weight

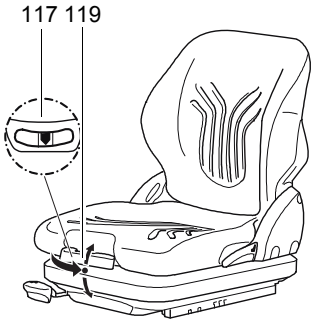

NOTE

Incorrectly adjusted seat cushioning can damage your health

To achieve optimal seat damping, the driver's seat must be adjusted according to the driver's weight.

Set the driver's weight when the seat is occupied.

▶ Hold the weight setting lever only by the recess, do not reach through underneath the lever.

Procedure

- Fold out the weight adjustment lever (119) as far as it will go in the arrow direction.
- Move the weight adjustment lever (119) up and down to set the seat to a higher weight.
- Move the weight adjustment lever (119) up and down to set the seat to a lower weight.

➔ The driver's weight is correct when the arrow is in the middle of the display window (117). The minimum or maximum weight setting is reached when you can feel a return stroke on the lever.

- After setting the weight, move the lever (119) back in full.

The driver's weight is now set.

Driver's seat with pneumatic weight adjustment (MSG 75) (○)

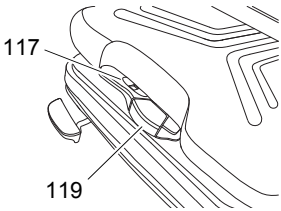

Procedure

- Pull the weight adjustment lever (119) up to set the seat to a higher weight.
- Push the weight adjustment lever (119) down to set the seat to a lower weight.

The driver's weight is correct when the arrow is in the middle of the display window (117).

Adjusting the backrest

Procedure

- Sit on the driver's seat.
- Pull the lever (118) to adjust the backrest.
- Adjust the backrest tilt.
- Release the lever (118) again. The backrest is locked.

The backrest is now set.

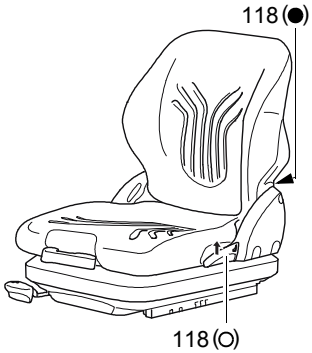

Adjusting the lumbar support (○)

Procedure

- Turn the hand wheel (121) to the required position.
  Position 0 = no warping in lumbar vertebrae area.
  Position 1 = increasing warping in upper lumbar vertebrae area.
  Position 2 = increasing warping in lower lumbar vertebrae area.

The lumbar support is now set.

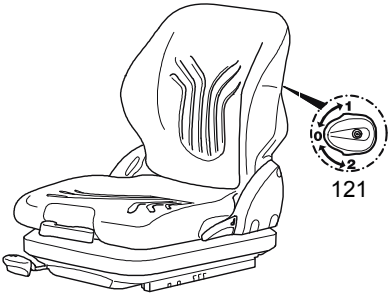

Switching the seat heating on and off (○)

Procedure

- Press the seat heating switch (122).
  Switch setting 1 = Seat heating on.
  Switch setting 0 = Seat heating off.

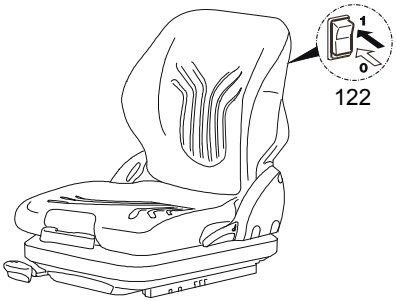

Adjusting the backrest extension (○)

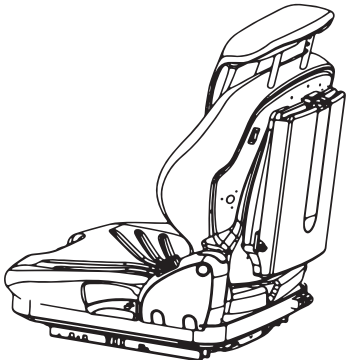

⚠ CAUTION!

Accident risk when adjusting the backrest during travel

▶ Do not adjust the backrest extension while travelling.

Procedure

- The backrest extension height can be adjusted by changing the detent.
- Pull the backrest up and lock it in place to extend the backrest.
- Push the backrest down and lock it in place to shorten the backrest.

4.4.3 Adjusting the armrest (○)

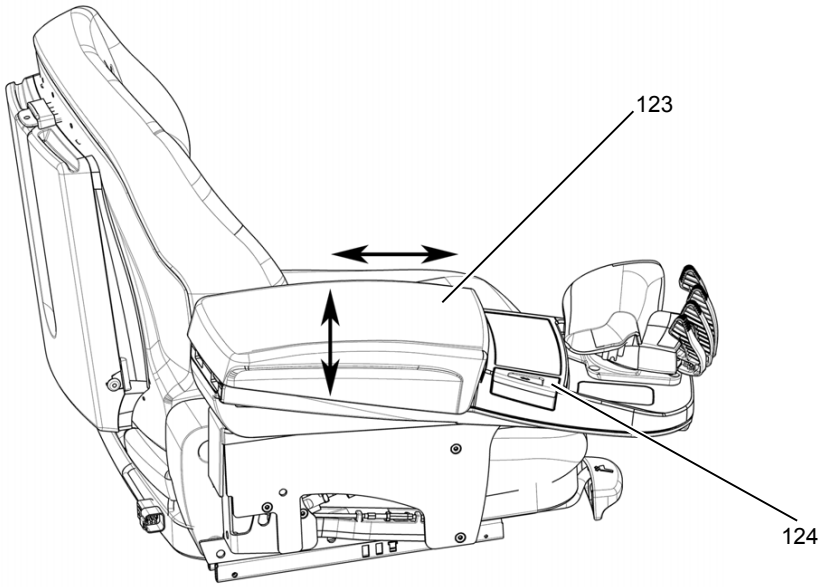

Adjusting the Armrest

Procedure

- Press the lock (124) and hold it in this position.
- Move the armrest (123) vertically and horizontally.
- Release the lock (124) at the desired position.
- Push the armrest (123) slightly forward or back until it locks in position.

The armrest is now positioned.

4.4.4 Adjusting the armrest

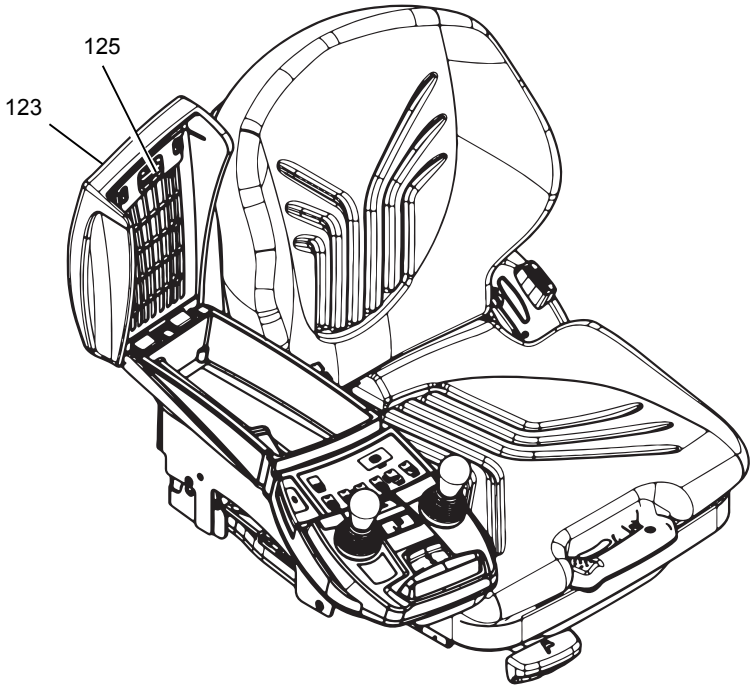

Adjusting the armrest

Procedure

- Fold up the armrest (123).
- Set the height adjuster (125) to the desired position (high/low).
- Fold the armrest (123) down.

4.4.5 Adjusting the comfort seat (○)

⚠ WARNING!

Risk of accidents and damage to health

An incorrectly adjusted driver’s seat can result in accidents and damage to health.

▶ Do not adjust the driver’s seat while travelling.

▶ The driver’s seat should lock in position after adjustment.

▶ Check and adjust the individual driver's seat setting before starting up the truck.

▶ Hold the weight setting lever only by the recess, do not reach through underneath the lever.

Setting the driver's weight

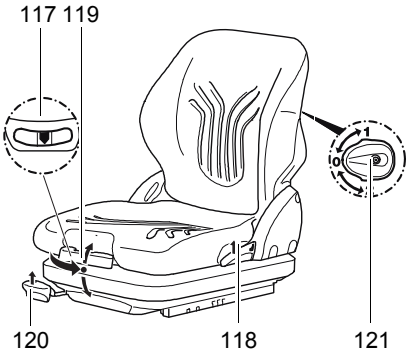

NOTE

Incorrectly adjusted seat cushioning can damage your health

To achieve optimal seat cushioning, the driver’s seat must be adjusted according to the driver’s weight.

Set the driver's weight when the seat is occupied.

▶ Hold the weight adjustment lever only by the recess; do not reach through underneath the weight adjustment lever.

Procedure

- Fold out the weight adjustment lever (119) as far as it will go in the arrow direction.
- Move the weight adjustment lever (119) up and down to set the seat to a higher weight.
- Move the weight adjustment lever (119) down and up to set the seat to a lower weight.

➔ The driver's weight is correctly set when the arrow is in the middle of the display window (117). The minimum or maximum weight setting is reached when you can feel a return stroke on the lever.

- After setting the weight, fully fold back in the weight adjustment lever (119).

The driver’s weight is now set.

➔ Hold the weight setting lever (119) only by the recess, never reach through underneath the lever.

Adjusting the backrest

Procedure

- Sit on the driver’s seat.
- Pull the lever (118) to adjust the backrest.
- Adjust the backrest tilt.
- Release the lever (118) again. The backrest is locked.

The backrest is now set.

Adjusting the seat position

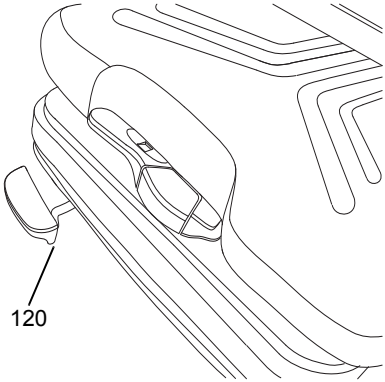

⚠ CAUTION!

An unsecured driver's seat can cause injury

An unsecured driver's seat can slide out of its guide during travel, resulting in accidents.

▶ The driver's seat must be locked in position.

▶ Do not adjust the driver's seat while travelling.

Procedure

- Sit on the driver's seat.
- Pull the seat locking lever (120) up.
- Push the driver's seat forwards or backwards to the desired position.
- Engage the seat locking lever (120).

The seat position is now correctly set.

Adjusting the lumbar support (○)

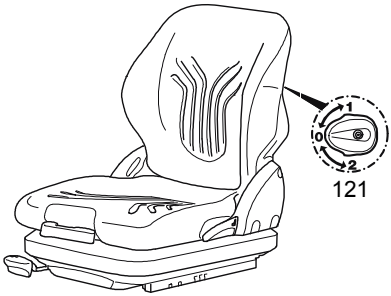

Procedure

- Turn the hand wheel (121) to the required position.
  Position 0 = no warping in lumbar vertebrae area.
  Position 1 = increasing warping in upper lumbar vertebrae area.
  Position 2 = increasing warping in lower lumbar vertebrae area.

The lumbar support is now set.

4.4.6 Adjusting the steering wheel / steering column

⚠ CAUTION!

Do not adjust the steering wheel while driving.

▶ Only adjust the steering wheel when the truck is stationary.

The angle of the steering wheel can adjusted to suit the operator.

Procedure

- Pull the steering wheel adjusting lever (127) in the direction of the arrow (126).
- Tilt the steering wheel (7) forward or backward as required.
- Push the steering wheel adjusting lever (128) in the direction of the arrow.

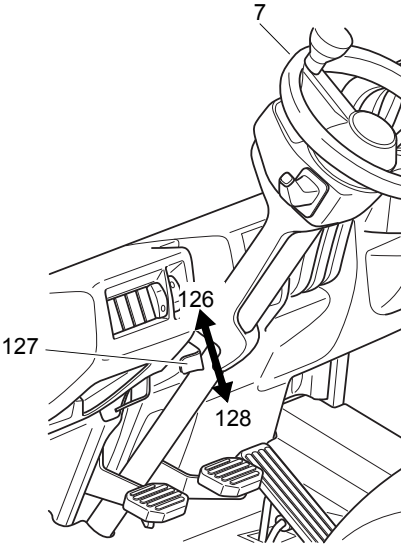

4.5 Seat Belt

⚠ DANGER!

A faulty seat belt can cause injury

Using a faulty seat belt can result in injury.

▶ Only operate the truck with the seat belt intact. A faulty seat belt should be replaced immediately.

▶ The truck must remain decommissioned until a functional seat belt has been fitted.

⚠ WARNING!

Travelling without a seat belt increases the risk of injury.

Accidents or personal injury can result if the seat belt is not worn or is modified.

▶ Always put the seat belt on before starting the industrial truck.

▶ Do not modify the seat belt.

▶ Damaged or non-operational seat belts must be replaced by trained personnel.

▶ Seat belts must always be replaced after an accident.

▶ Only original spare parts must be used for retrofits or repairs.

▶ Report any defects immediately to your supervisor.

▶ Remove the truck from service until a functional seat belt has been fitted.

➔ Protect the seat belt from contamination (e.g. cover it when the truck is idle) and clean it regularly. Frozen belt locks or pulleys must be thawed out and dried to prevent them from freezing up again.
The temperature of the warm air should not exceed +60 °C!

Checking the seat belt

Procedure

- Check the attachment points for wear and damage.
- Check the cover for damage.
- Pull the belt out fully from the retractor and check for damage (loose seams, fraying and nicks).
- Test the belt buckle and make sure the belt returns correctly into the retractor.

Check the automatic locking system

Procedure

- Park the truck on a level surface.
- Jerk the seat belt out suddenly.

➔ The locking system should prevent the belt from coming out.

The seat belt has now been checked.

Starting the industrial truck on steep slopes

The automatic blocking system locks the belt in the retractor when the truck is positioned on a steep slope. This prevents the belt from being pulled out of the retractor.

➔ Carefully drive the truck off the slope and then put on the belt.

5 Industrial Truck Operation

5.1 Safety regulations for truck operation

⚠ WARNING!

Magnetic fields can cause accidents

Electronic components can be affected or damaged by external magnetic fields. This can lead to malfunctions or accidents.

▶ Do not use or keep magnets or clamping magnets in the immediate vicinity of the controls.

Travel routes and work areas

Only use lanes and routes specifically designated for truck traffic. Unauthorised third parties must stay away from work areas. Loads must only be stored in places specially designated for this purpose.
The truck must only be operated in work areas with sufficient lighting to avoid danger to personnel and materials. Additional equipment is necessary to operate the truck in areas of insufficient lighting.

⚠ DANGER!

Do not exceed the permissible surface and point loading on the travel lanes.
At blind spots get a second person to assist.
The driver must ensure that the loading dock /dock leveller cannot be removed or come loose during loading/unloading.

NOTE

Loads must not be deposited on travel or escape routes, in front of safety mechanisms or operating equipment that must be accessible at all times.

Travel conduct

The operator must adapt the travel speed to local conditions. The truck must be driven at slow speed when negotiating bends or narrow passageways, when passing through swing doors and at blind spots. The operator must always observe an adequate braking distance between the forklift truck and the vehicle in front and must be in control of the truck at all times. Abrupt stopping (except in emergencies), rapid U turns and overtaking at dangerous or blind spots are not permitted. Do not lean out or reach beyond the working and operating area.

Do not use a mobile phone or walkie-talkie without a handsfree device while operating the truck.

What to do in hazardous situations

If the truck is about to tip over, do not loosen the seat belt. The operator must not jump off the truck. The operator must lean his upper body over the steering wheel and hold on with both hands. Tilt your body in the opposite direction of the tipping.

Travel visibility

The operator must look in the direction of travel and must always have a clear view of the route ahead. If the truck is carrying loads that affect visibility, the truck must travel against the load direction. If this is not possible, a second person must walk alongside the truck as a lookout to observe the travel route while maintaining eye contact with the operator. Proceed only at walking pace and with particular care. Stop the truck as soon as you lose eye contact.

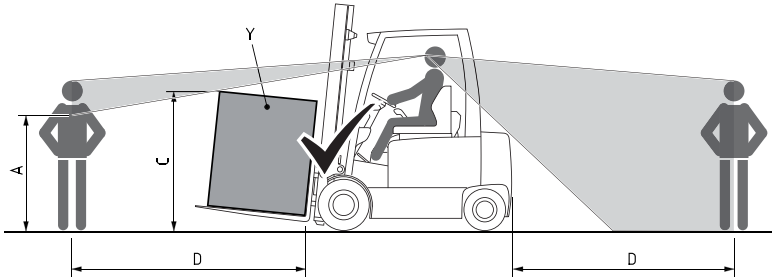

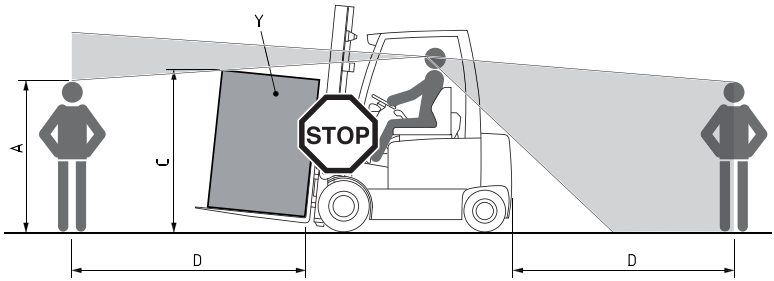

➔ At a distance (D) of 4000 mm between the rear of the load (Y) and a person or obstacle, the non-visible area (A) must not be larger than 1085 mm. If the height (C) impairs visibility to the extent that A 1085 mm is exceeded, the truck must travel in the opposite direction to the load direction.

Depending on the operating conditions and application of the truck, the operating company or its representative is obligated to define a visible area which is appropriate to the prevailing hazard(s).

Negotiating slopes and inclines

Negotiating slopes and inclines up to 15% is only permitted if they are specifically designed as travel routes, are clean and have a non-slip surface and providing they can be safely travelled along in accordance with the truck's technical specifications. The truck must always be driven with the load facing uphill. The industrial truck must not be turned, operated at an angle or parked on inclines and slopes. Inclines must only be negotiated at slow speed, with the driver ready to brake at any moment. Particular care is required when travelling near slopes and quay walls.

Negotiating lifts, loading ramps and docks

Lifts may only be negotiated if they have sufficient capacity, are suitable for driving on and authorised for truck traffic by the owner. The driver must satisfy himself of the above before entering these areas. The truck must enter lifts with the load in front and must take up a position which does not allow it to come into contact with the walls of the lift shaft. Persons riding in the lift with the forklift truck must only enter the lift after the truck has come to a rest and must leave the lift before the truck. The driver must ensure that the loading ramp / dock cannot move or come loose during loading / unloading.

Type of loads to be carried

The operator must make sure that the load is in a satisfactory condition. Loads must always be positioned safely and carefully. Use suitable precautions to prevent parts of the load from tipping or falling down. Prevent liquid loads from sloshing out.

Inflammable liquids (e.g. molten metal etc.) may only be transported with suitable auxiliary equipment. Contact the manufacturer's customer service department.

➔ For safety instructions on the nature of loads to be carried with attachments,see page 112.

Work platforms

⚠ WARNING!

The use of working platforms is governed by national law. In some states the use of working platforms is prohibited on industrial trucks. Observe the applicable law. Working platforms can only be used in the country of application if the law permits it.

▶ Contact the national authorities before using a working platform.

Towing trailers

The truck may only be used occasionally to tow trailers, see page 150

⚠ DANGER!

Exhaust emissions can be fatal

▶ The truck must only be operated in well ventilated areas. If the truck is operated in enclosed areas, this can lead to a build-up of harmful exhaust emissions, resulting in dizziness, tiredness and even death.

▶ The operator must comply with legal requirements, technical standards and health and safety regulations when operating an IC motor powered lift truck in closed rooms.

NOTE

Check emissions at regular intervals

- ▶ Check the combustion engine exhaust emissions at regular intervals in accordance with national regulations.
- ▶ Black or blue exhaust smoke is an indicator of high emission levels resulting from combustion engine damage or wear.
- ▶ In this case the truck must be examined by specialist personnel.

5.2 Preparing the truck for operation

Before starting the truck

➔ The truck should only be operated from the driver's seat. Do not run up the engine in idle. The engine soon reaches operating temperature at a moderate charge and when the speed alternates. Only fully charge the engine once it has reached operating temperature.

Requirements

– Checks and operations to be performed before starting daily operation, see page 79.

Switching on the truck

Procedure

- Apply the parking brake (88).
- Set the travel direction switch (86) to neutral N. Otherwise the engine cannot be started.
- Carry out the appropriate starting procedure for the engine type, see page 101 or see page 102.

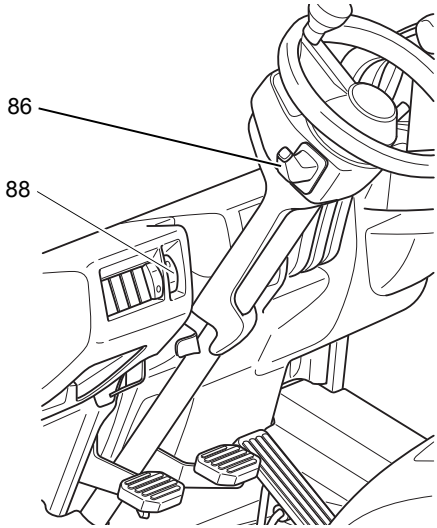

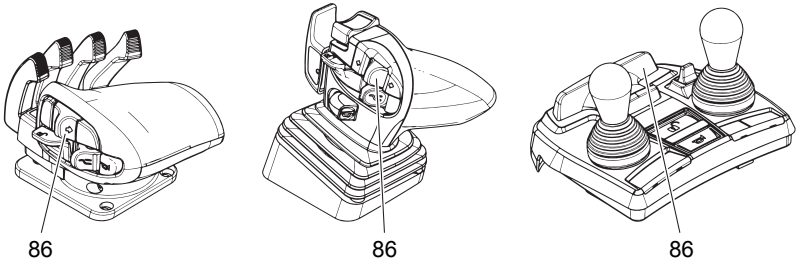

5.3 Starting the Truck

5.3.1 Starting procedure for the DFG

Procedure

- Insert the key in the key switch (83). Set key switch to “I”.
- The pre-heat indicator lamp (105) lights up and goes out automatically as soon as the required pre-heat time (approx. 6 seconds) has been reached.
- All the warning indicators light up briefly to test operation.

➔ All the indicators except for the engine oil pressure display (97), parking brake indicator (100), indicator lamp for neutral (101) and charge current indicator (95) should go out after a short while. If not, stop the start-up process and rectify the fault.

- Now set the ignition/starter key to the "II" position.

➔ Only apply the starter for a maximum of 15 seconds without interruption. The industrial truck contains a repeat start block that prevents it from starting again while the engine is running.

- Release the key as soon as the engine starts. It automatically reverts to the "I" position.

➔ All indicators lights except for neutral setting (101) and parking brake (100) should go out as soon as the engine starts. If not, switch off the engine immediately and rectify the fault.

Truck is operational.

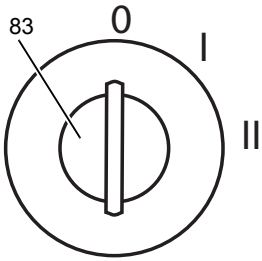

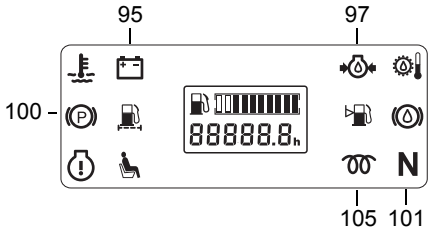

5.3.2 Starting procedure for the TFG

⚠ DANGER!

Risk of escaping liquid gas if the truck does not start

▶ Note the safety regulations governing the handling of liquid gas (see page 53)

▶ Close the gas bottle shut-off valve.

▶ Set the key switch to "O"

▶ Notify your superior.

Procedure

- Slowly open the shut-off valve on the LPG bottle.
- Insert the key in the key switch (83). Set the key switch to the "I" position.
- All the warning indicators light up briefly to test operation.

➔ All the warning indicators except for the engine oil pressure display (97), parking brake warning indicator (100), indicator lamp for neutral (101) and charge current warning indicator (95) should go out after a short while. If not, stop the start-up process and rectify the fault.

- Now set the ignition/starter key to the "II" position.

➔ Only apply the starter for a maximum of 15 seconds without interruption. The industrial truck contains a repeat start block that prevents it from starting again while the engine is running.

- Release the key as soon as the engine starts. It automatically reverts to the "I" position.

➔ All indicators lights except for neutral setting (101) and parking brake (100) should go out as soon as the engine starts. If not, switch off the engine immediately and rectify the fault.

Truck is operational.

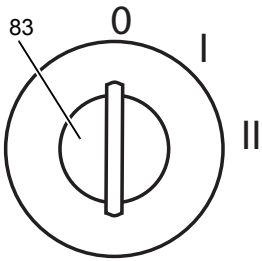

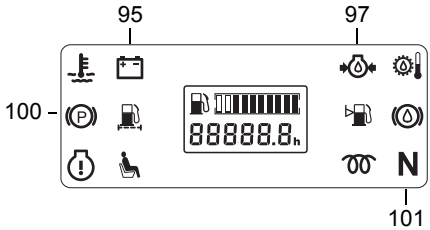

5.4 Parking the truck securely

⚠ WARNING!

Switching off an LPG truck under ground level areas could result in explosions.

LPG is heavier than air. An explosive LPG/air mixture could therefore form under ground level areas without sufficient ventilation.

▶ LPG trucks may only be switched off in ground level rooms or higher and providing they are adequately ventilated. They must not be switched off near to cellar doors and entry points, hollows, drains, drain inlets or other recesses below the parked truck.

⚠ WARNING!

An unsecured truck can cause accidents

Parking the truck on an incline, without the brakes applied or with a raised load / load handler is dangerous and is strictly prohibited.

▶ Always park the truck on a level surface. In special cases the truck may need to be secured with wedges.

▶ Always fully lower the mast and load handler.

▶ Tilt the mast forward.

▶ Always apply the parking brake switch before parking the truck.

▶ Choose a place to park where no other people are at risk of injury from lowered forks.

▶ Do not park and abandon a truck on an incline.

Parking and leaving the truck

Procedure

- Apply the parking brake (88).
- Lowers the load handler.
- Turn the key in the key switch (83) to the “0” position.
- Remove the key from the key switch (83).

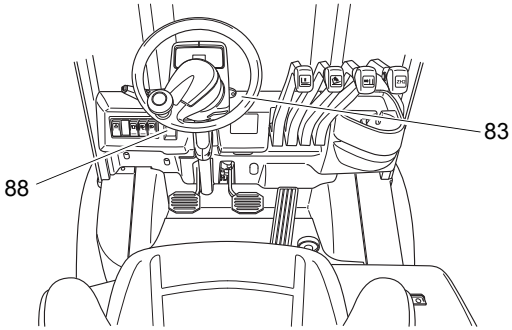

➔ **TFG only:** If the key is set to “0” while the engine is running, the engine will continue to run for a short time. This ensures that the remaining gas in the lines between the engine and the automatic shutoff valve of the LPG system is used up. If the engine has accidentally switched off, start up the engine and switch it off again in the correct manner at the end of the journey.

5.5 Battery Isolator

⚠ CAUTION!

Accident risk

Applying the battery isolator when driving will cause the truck to decelerate to a halt with maximum braking power. This may cause the load to slide off the forks. There is a greater risk of accidents and injury.
The operation of the battery isolator must not be affected by any objects placed in its way.

Procedure

- Move the key switch to the O position.
- Turn and remove the battery isolator (93).

This disconnects the battery from the on-board supply network and switches off all electrical functions.

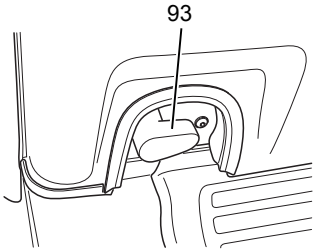

5.6 Travel

⚠ WARNING!

Improper travel can result in accidents

▶ Do not get up from the driver's seat during travel.
▶ Do not drive the truck unless your are wearing a seat belt and the panels and doors are properly locked.
▶ Do not lean out of the truck while travelling.
▶ Make sure that the travel area is clear.
▶ Adapt your travel speed to the route conditions in the work area and the load.
▶ Tilt the mast back and raise the fork carriage approx. 200 mm.
▶ Make sure you have sufficient visibility when reversing.

⚠ WARNING!

Risk of accidents due to unexpected travel operations

When the motor is running and the direction of travel selected, a slight torque is applied to the drive wheels via the torque converter even at idle speed, as a result of which rolling up and slow travel movement can occur if no brake is applied.

▶ Operate the service brake if there should be no travel movement when the motor is running and the direction of travel is selected.
▶ Operate the parking brake at standstill if initially there should be no travel movement when the motor is running and the direction of travel is selected.

Travel

NOTE

Only change direction of travel when the truck is stationary.

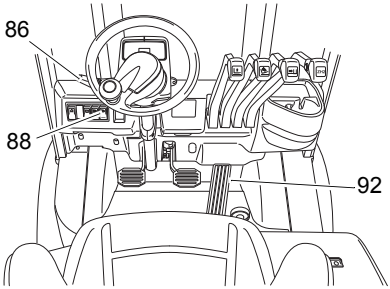

Requirements

– Truck prepared for operation, see page 100.

Procedure

- Release the parking brake (88).
- Choose the travel direction with the travel direction switch (86).
  - To drive forwards, push the switch forwards.
  - To reverse, pull the switch backwards.
- Raise the fork carriage approx. 200 mm.
- Tilt the mast back.
- Apply the accelerator pedal (92). The travel speed is governed by the accelerator (92).

The truck travels in the direction selected.

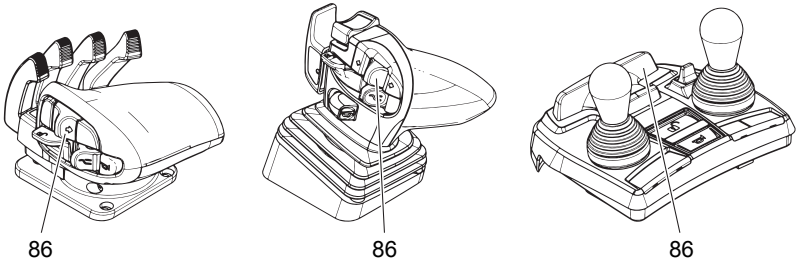

Neutral locking

When the driver leaves the truck, the transmission is automatically set to “Neutral”. To start driving again (when the seat is occupied) all controls should be in the neutral position and the travel direction switch must be in the neutral position "N". The travel direction required can then be selected.

Slow travel / brake pedal

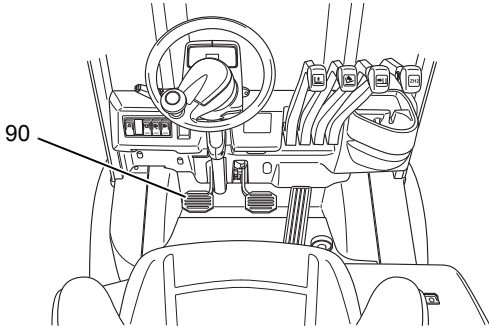

Requirements

– Truck ready for operation, see page 100.

Procedure

- Apply the slow travel / brake pedal (90) sensitively.

  The Industrial truck moves slowly in the selected travel direction and allows for excellent shunting in confined areas. Rapid lifting is possible at a slow travel speed.

NOTE

The slow-travel/brake pedal can also apply the brakes, but this is only intended to help during slow travel. The slow-travel/brake pedal must not be used as a service brake.

5.7 Steering

Steering

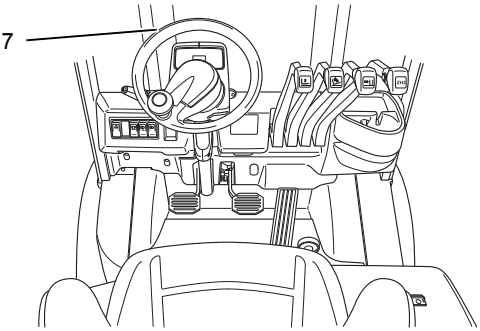

Procedure

➔ Very little steering effort is required; you should therefore turn the steering wheel (7) sensitively.

- To negotiate a right-hand bend: Turn the steering wheel clockwise according to the required steering radius.
- To negotiate a left-hand bend: Turn the steering wheel anti-clockwise according to the required steering radius.

The truck travels in the direction selected.

5.8 Brakes

⚠ WARNING!

Accident risk

The brake pattern of the truck depends largely on the ground conditions.

▶ The operator must take into account the travel route conditions when braking.

▶ Brake with care to prevent the load from slipping.

▶ Allow for increased braking distance when travelling with an attached load.

▶ Use the service brake in emergencies.

⚠ WARNING!

Risk of accidents due to unexpected travel operations

When the motor is running and the direction of travel selected, a slight torque is applied to the drive wheels via the torque converter even at idle speed, as a result of which rolling up and slow travel movement can occur if no brake is applied.

▶ Operate the service brake if there should be no travel movement when the motor is running and the direction of travel is selected.

▶ Operate the parking brake at standstill if initially there should be no travel movement when the motor is running and the direction of travel is selected.

5.8.1 Service brake

The brake pedal applies the front brakes hydraulically.

When the brake pedal (91) is pressed, the brakes are applied without disengaging the transmission.

Applying the slow-travel/ brake pedal (90) controls the flow of power in the powershift transmission. The slow-travel/brake pedal can also be used to brake gently during slow travel.

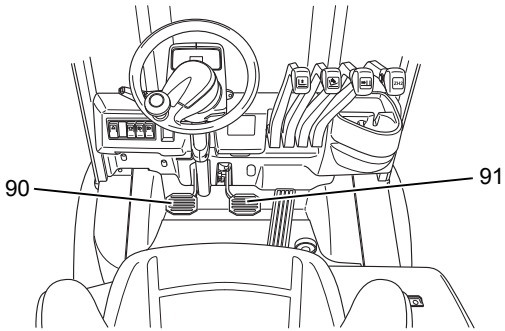

5.8.2 Parking brake

⚠ DANGER!

Accident risk

- ▶ The parking brake will hold the truck with maximum load on a clean ground surface, on inclines of up to 15%.
- ▶ Do not park and abandon the truck on an incline.
- ▶ Applying the parking brake switch when driving will cause the truck to decelerate to a halt with maximum braking power. This may cause the load to slide off the forks. There is a greater risk of accidents and injury.

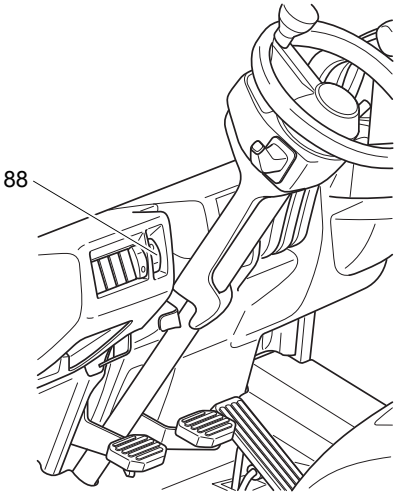

➔ The parking brake can be used as an emergency brake.

Procedure

- Apply the parking brake (88) .
  The parking brake is activated and the parking brake indicator (100) lights up.

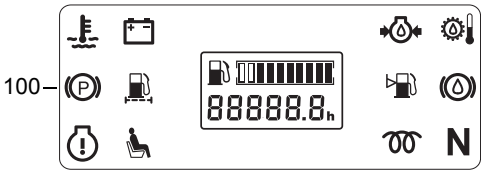

➔ When the parking brake (88) is applied, the truck brakes at maximum force irrespective of the position of the accelerator and brake pedals. Pressing the parking brake switch (88) again releases the parking brake.

➔ If the operator leaves the operating position, an audible warning signal is given after approx. 1.5 seconds. When the parking brake switch (88) is pressed, the warning signal is switched off.

5.9 Adjusting the forks

⚠ WARNING!

Unsecured and incorrectly adjusted forks can cause accidents

Make sure that the fork retaining mechanisms (115) are fitted before adjusting the forks. Depending on the fork carriage, the fork-retaining mechanism (115) will be either via retaining bolts (85 Nm) or fixed stops.

▶ Adjust both forks so that they are equidistant from the outside edges of the fork carriage.

▶ Engage the locking pin in a groove to prevent the forks from moving accidentally.

▶ The load centre must lie centrally between the forks.

⚠ WARNING!

Trapping hazard

There is a trapping hazard when you perform this operation.

▶ Wear work gloves and safety shoes.

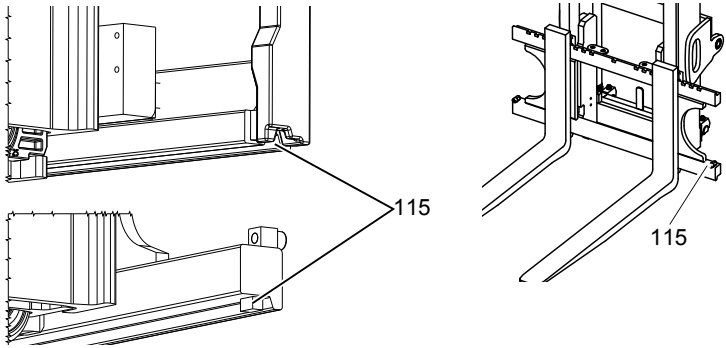

Adjusting the forks

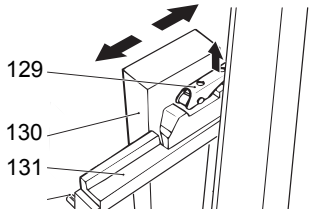

Requirements

– Park the truck securely, see page 103.

Procedure

- Lift up the locking lever (129).
- Push the forks (130) into the correct position on the fork carriage (131).

➔ To lift the load securely, the forks (130) must be spread as far apart as possible and positioned centrally with respect to the fork carriage. The load centre must lie centrally between the forks (130).

- Push the locking lever down (129) and move the forks until the locking pin engages in a slot.

The forks are now adjusted.

5.10 Replacing the forks

⚠ WARNING!

Unsecured forks can cause injury

This is a risk of injury and trapping when replacing the forks.

▶ Wear work gloves and safety shoes.

▶ Never pull the forks towards your body.

▶ Always push the forks away from your body.

▶ Secure heavy forks with lifting accessories and a crane before pushing them down.

▶ After replacing the forks, fit the retaining bolts (115) and make sure that the retaining bolts are seated correctly.

▶ Tightening torque for the retaining bolts: 85 Nm.

Replacing the forks (fork carriages with retaining bolts)

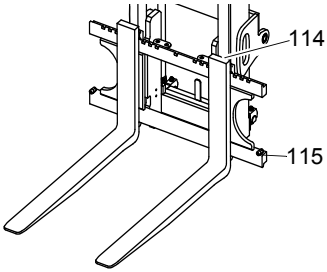

Requirements

– Load handler lowered and fork tines not touching the ground.

Procedure

- Disassemble the retaining bolts (115).
- Loosen the fork stop (114).
- Carefully push the fork tines off the fork carriage.

The fork tines are now dismantled from the fork carriage and can be replaced.

Replacing the forks (fork carriages with fixed stops)

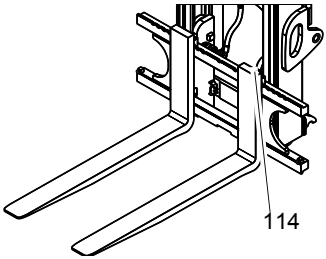

Requirements

– Load handler lowered and forks not touching the ground.

Procedure

- Loosen the fork stop (114).
- Carefully push the forks over the recess on the lower cross beam of the fork carriage.
- Raise the fork tips and lift them out of the top guide.

The fork tines are now dismantled from the fork carriage and can be replaced.

5.11 Lifting, transporting and depositing loads

⚠ WARNING!

Risk of accident when the centre of gravity of the load is outside of the load centre distance

If the centre of gravity G of a raised load lies outside the load centre distance D specified for the load handler in the horizontal or vertical planes, under unfavourable conditions the raised load and also the truck can tip over while working.

- ▶ Observe load centre distances and capacities of the load handler, see page 39.
- ▶ Pick up the load so that its centre of gravity lies between the load arms of the load handler.
- ▶ Preferably, the load should be configured and picked up so that its centre distance lies within the load centre distance of the load handler ($d_1 \leq D$ and $d_2 \leq D$, see area DD in the illustration).
- ▶ A load with a centre of gravity outside of the load centre distance of the load handler ($d_1 > D$ and/or $d_2 > D$) should only be moved very carefully, as this load case has not been checked on a truck tested according to the test guideline.

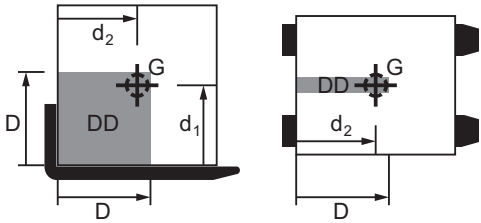

➔ For loads with an even weight distribution, the load centre distance lies in the geometrical centre of the volume.

➔ For rectangular loads with an even weight distribution over the entire volume the load centre distance is in the middle, i.e. half the length, half the height and half the width of the load.

⚠ WARNING!

Unsecured and incorrectly positioned loads can cause accidents.

Before lifting a load the operator must make sure that it has been correctly palletised and does not exceed the truck's capacity.

▶ Instruct other people to move out of the hazardous area of the truck. Stop working with the truck if people do not leave the hazardous area.

▶ Only carry loads that have been correctly secured and positioned. Use suitable precautions to prevent parts of the load from tipping or falling down.

▶ Do not transport loads other than on the authorised load handler.

▶ Damaged loads must not be transported.

▶ If the stacked load obscures forward visibility, then you must reverse the truck.

▶ Do not exceed the maximum loads specified on the capacity plate.

▶ Check the fork spread before lifting the load and adjust if necessary.

▶ Insert the forks as far as possible underneath the load.

Lifting loads

Requirements

– Load correctly palletised.
– Fork spread for the pallet checked and adjusted if necessary.
– Load weight matches the truck's capacity.
– Forks evenly loaded for heavy loads.

Procedure

- Drive the truck carefully up to the pallet.
- Set the mast vertical.
- Slowly insert the forks into the pallet until the fork shank touches the pallet.
- Raise the load handler.
- Reverse carefully and slowly until the load is outside the storage area. Make sure you have enough clear space to reverse into.

NOTE

Loads must not be deposited on travel or escape routes, in front of safety mechanisms or operating equipment that must be accessible at all times.

Transporting loads

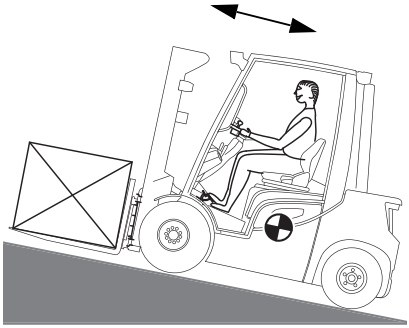

Requirements

– Load raised correctly.
– Load handler lowered for transport (approx. 150 - 200 mm above the ground).
– Mast tilted back fully.

Procedure

- On slopes and inclines always carry the load facing uphill, never approach at an angle or turn.
- Accelerate and decelerate with care.
- Adapt your travel speed to the conditions of the route and the load you are transporting.
- Watch out for other traffic at crossings and passageways.
- Always travel with a lookout at blind spots.

Depositing loads

Requirements

– Storage location suitable for storing the load.

Procedure

- Set the mast vertical.
- Drive the truck carefully up to the storage location.
- Carefully lower the load handler so that the forks are clear of the load.
  Avoid depositing the load to prevent damage to the load and the load handler.
- Lowers the load handler.
- Carefully remove the forks from the pallet.

The load is deposited.

5.12 Operating the Lift Mechanism and Integrated Attachments

⚠ WARNING!

Operating the lifting device and integrated attachments can be hazardous

Other people can be injured in the truck's hazardous area.
The hazardous area is defined as the area in which people are at risk from the truck movement, the load handler, attachments etc. This also includes areas which can be reached by falling loads or lowering operating equipment.
Apart from the operator (in the normal operating position) there should be no other people in the truck's hazardous area.

- ▶ Instruct other people to move out of the hazardous area of the truck. Stop working with the truck if people do not leave the hazardous area.
- ▶ If people do not leave the hazardous area despite the warning, prevent the truck from being used by unauthorised people.
- ▶ Only carry loads that have been correctly secured and positioned. Use suitable precautions to prevent parts of the load from tipping or falling down.
- ▶ Do not exceed the maximum loads specified on the capacity plate.
- ▶ Do not stand underneath a raised load handler.
- ▶ Do not stand on the load handler.
- ▶ Do not lift other people on the load handler.
- ▶ Do not reach through the mast.
- ▶ The controls should only be operated from the driver’s seat, and never suddenly.
- ▶ The operator must be trained to handle the lift mechanism and the attachments.

⚠ WARNING!

An offset load centre can result in accidents

The capacity of the truck is reduced when using side shifts that are more than 100 mm outside the truck centre.

- ▶ Observe the capacity plate with the reduced capacity.

NOTE

If the seat is not occupied, the hydraulic functions are disabled.

If the operator leaves the seat for more than 1.5 seconds without putting the truck into neutral, the hydraulic functions are disabled. The hydraulic functions are released again if the operator sits down again and puts the truck into neutral. If the truck is equipped with belt lock control (○), the belt must also be closed again to release the hydraulic functions.

➔ The controls return to the neutral position on their own and the hydraulic functions are stopped.

When the mechanical end stop has been reach for the relevant functions (there will be a noise from the pressure relief valve) , immediately move the control lever back to the neutral position.

Controlling the speed of the lifting device

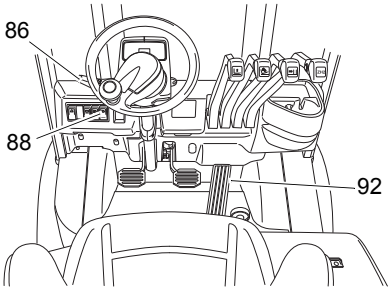

Moving the levers and changing the engine speed governs the operating speed of the hydraulic cylinders. When the levers are released, they automatically revert to neutral and the lifting device remains in the position it has reached.

Procedure

- Set the travel direction switch (86) to neutral.
- Increase the engine speed with the accelerator pedal (92).
- Keep moving the lever back to increase the speed of the lifting device.

➔ The engine speed does not affect the lowering speed of the fork carriage.

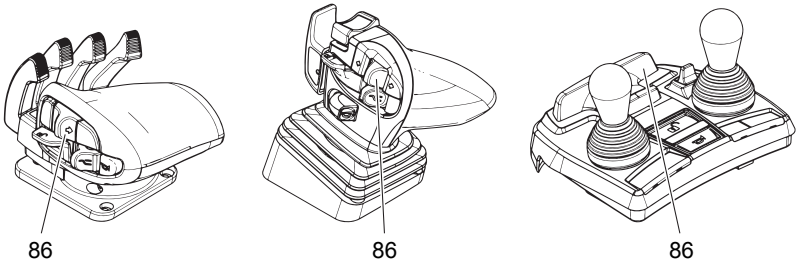

5.12.1 Operating the lifting device with the Solo-Pilot

Lifting and lowering

Requirements

– To prepare the truck for operation, see page 100

Procedure

- Pull the Solo-Pilot lever (132) in direction H to raise the load.
- Push the Solo-Pilot lever (132)in direction S to lower the load.

The load is now raised / lowered.

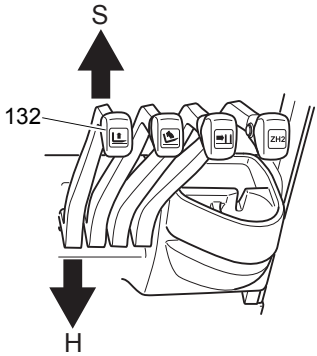

➔ When the limit position for the operation has been reached (there will be a noise from the pressure relief valve) release the lever. The lever will revert automatically to neutral.

Tilting the mast forward / backward

Requirements

– Truck prepared for operation, see page 100.

Procedure

- Pull the Solo-Pilot lever (133) in direction R to tilt the mast back.
- Push the Solo-Pilot lever (133) in direction V to tilt the mast forward.

The mast is now tilted back or forward.

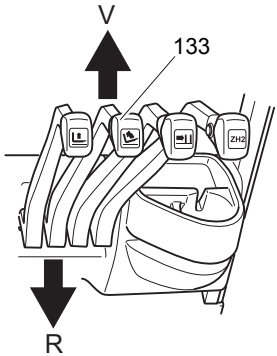

➔ When the limit position for the operation has been reached (there will be a noise from the pressure relief valve) release the lever. The lever will revert automatically to neutral.

Positioning the integrated sideshifter (option)

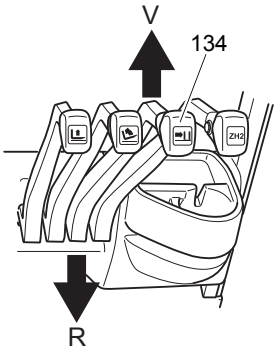

Requirements

– Truck prepared for operation, see page 100.

Procedure

- Pull the Solo-Pilot lever (134) in direction R to move the load handler to the right (from the operator's viewpoint).
- Pull the Solo-Pilot lever (134) in direction V to move the load handler to the left (from the operator's viewpoint).

The sideshifter is now positioned.

➔ When the limit position for the operation has been reached (there will be a noise from the pressure relief valve) release the lever. The lever will revert automatically to neutral.

Positioning the forks with an integrated fork positioner (option)

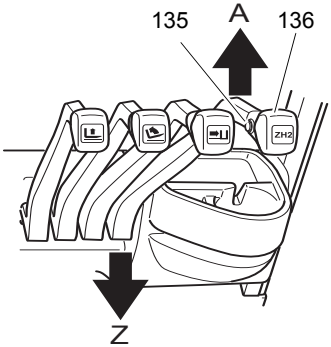

⚠ CAUTION!

Do not use the fork positioner to clamp loads.

Requirements

– Truck prepared for operation, see page 100.

Procedure

- Press the acknowledgement button (135) and at the same time pull the SOLO-PILOT (136) in direction Z: the forks will move towards each other.
- Press the acknowledgement button (135) and at the same time push the SOLO-PILOT (136) in direction A: the forks will spread apart.

The forks are now positioned.

Synchronising the forks on an integrated fork positioner (optional equipment)

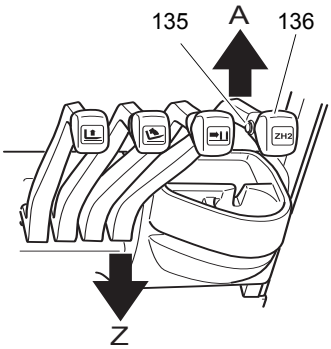

Requirements

– Truck prepared for operation, see page 100.
– The fork tines are no longer aligned.

Procedure

- Press the acknowledgement button (135) and at the same time push the SOLO-PILOT (136) in direction A and spread the fork apart as far as they will go.
- Press the acknowledgement button (135) and at the same time pull the SOLO-PILOT (136) in direction Z and bring the fork as close to each other as they will go.

The fork are now synchronised.

➔ When the limit position for the operation has been reached (there will be a noise from the pressure relief valve) release the lever. The lever will revert automatically to neutral.

5.12.2 Operating the Lift Mechanism with the SOLO-PILOT on the Armrest

Lifting and lowering

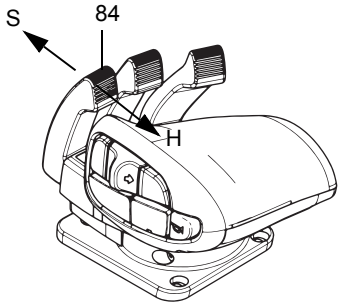

Requirements

– Truck prepared for operation, see page 100.

Procedure

- Pull the lever (84) in direction H to raise the load.
- Push the lever (84) in direction S to lower the load.

The load is now raised or lowered.

➔ When the limit position for the operation has been reached (there will be a noise from the pressure relief valve) release the lever. The lever will revert automatically to neutral.

Tilting the mast forward/backward

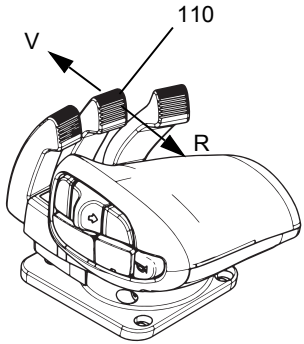

⚠ **CAUTION!**

Trapping hazard from tilted mast

▶ Make sure no part of the body is between the mast and the driver's cab when tilting the mast back.

Requirements

– Truck prepared for operation, see page 100.

Procedure

- Pull the lever (110) in direction R to tilt the mast back.
- Push the lever (110) in direction V to tilt the mast forward.

The mast is now tilted back or forward.

➔ When the limit position for the operation has been reached (there will be a noise from the pressure relief valve) release the lever. The lever will revert automatically to neutral.

Positioning the integrated sideshifter (option)

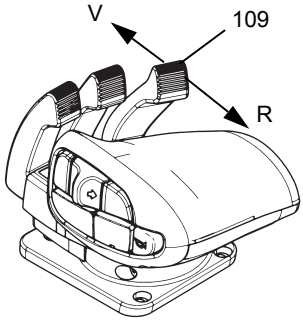

Requirements

– Truck prepared for operation, see page 100.

Procedure

- Pull the lever (109) in direction R to move the load handler to the right (from the driver's viewpoint).
- Push the lever (109) in direction V to move the load handler to the left (from the driver's viewpoint).

The sideshifter is now positioned.

➔ When the limit position for the operation has been reached (there will be a noise from the pressure relief valve) release the lever. The lever will revert automatically to neutral.

Positioning the forks with an integrated fork positioner (optional equipment)

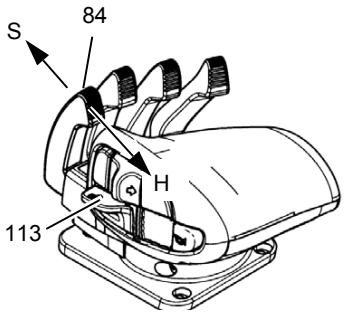

⚠ CAUTION!

Do not use the fork positioner to clamp loads.

Requirements

– Truck prepared for operation, see page 100.

Procedure

- Press and hold down the acknowledgement button (113).
- Pull the lever (84) in direction H.
  The forks move together.
- Press and hold down the acknowledgement button (113).
- Push the lever (84) in direction S.
  The forks move apart.

The forks are now positioned.

➔ When the limit position for the operation has been reached (there will be a noise from the pressure relief valve) release the lever. The lever will revert automatically to neutral.

Synchronising the forks with integrated fork positioner (optional equipment)

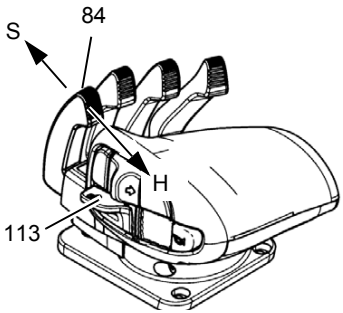

Requirements

– Truck prepared for operation, see page 100.
– The forks are no longer synchronised.

Procedure

- Press and hold down the acknowledgement button (113).
- Push the lever (84) in direction S.
- The forks move apart as far as the stop.
- Pull the lever (84) in direction H.
- The forks move together as far as the stop.

The fork are now synchronised.

➔ When the limit position for the operation has been reached (there will be a noise from the pressure relief valve) release the lever. The lever will revert automatically to neutral.

5.12.3 Operating the Lift Mechanism with the MULTI-PILOT on the Armrest

Lifting and lowering

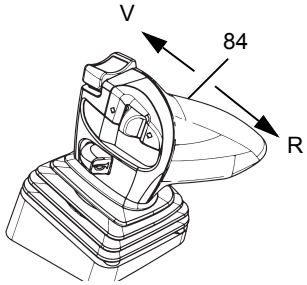

Requirements

– Truck prepared for operation, see page 100.

Procedure

- Pull the Multi-Pilot (84) in direction R to raise the load.
- Push the Multi Pilot (84) in direction V to lower the load.

The load is now raised or lowered.

When the limit position for the operation has been reached (there will be a noise from the pressure relief valve) release the lever. The lever will revert automatically to neutral.

Tilting the mast forward/backward

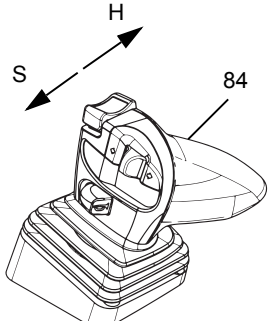

⚠ CAUTION!

Trapping hazard from inclined mast

▶ Make sure no part of your body is between the mast and driver's cab when tilting the mast back.

Requirements

– Truck prepared for operation, see page 100.

Procedure

- Push the Multi-Pilot (84) in direction H to tilt the mast forward.
- Push the Multi-Pilot (84) in direction S to tilt the mast back.

The mast is now tilted back or forward.

When the limit position for the operation has been reached (there will be a noise from the pressure relief valve) release the lever. The lever will revert automatically to neutral.

Positioning the integrated sideshift (option)

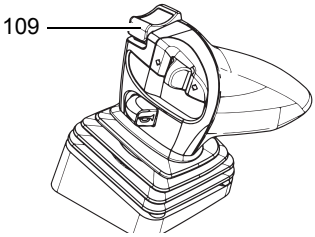

Requirements

– Truck prepared for operation, see page 100.

Procedure

- Press the button (109) to the left to move the load handler to the left (from the driver's viewpoint).
- Press the button (109) to the right to move the load handler to the right (from the driver's viewpoint).

The sideshifter is now positioned.

➔ When the limit position for the operation has been reached (there will be a noise from the pressure relief valve) release the lever. The lever will revert automatically to neutral.

Positioning the forks with an integrated fork positioner (optional equipment)

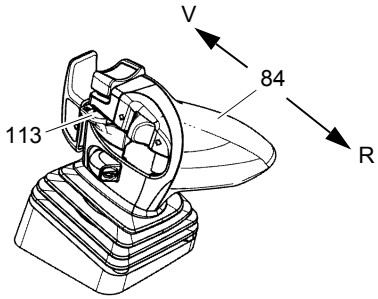

⚠ CAUTION!

Do not use the fork positioner to clamp loads.

Requirements

– Truck prepared for operation, see page 100.

Procedure

- Press and hold down the acknowledgement button (113).
- Push the MULTI-PILOT (84) in direction V.
  The forks move apart.

- Press and hold down the acknowledgement button (113).
- Pull the MULTI-PILOT (84) in direction R.
  The forks move together.

The forks are now positioned.

➔ When the limit position for the operation has been reached (there will be a noise from the pressure relief valve) release the lever. The lever will revert automatically to neutral.

Synchronising the forks with integrated fork positioner (optional equipment)

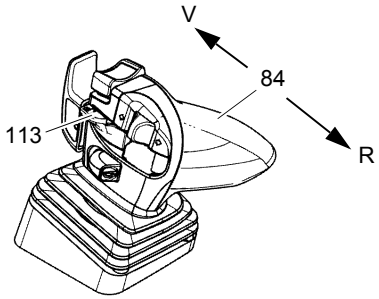

Requirements

– Truck prepared for operation, see page 100.
– The forks are no longer synchronised.

Procedure

- Press and hold down the acknowledgement button (113).
- Push the MULTI-PILOT (84) in direction V.
- The forks move apart as far as the stop.
- Pull the MULTI-PILOT (84) in direction R.
- The forks move together as far as the stop.

The fork are now synchronised.

➔ When the limit position for the operation has been reached (there will be a noise from the pressure relief valve) release the lever. The lever will revert automatically to neutral.

5.12.4 Operating the Lift Mechanism with the DUO-PILOT on the Armrest

Lifting and lowering

Requirements

– Truck prepared for operation, see page 100.

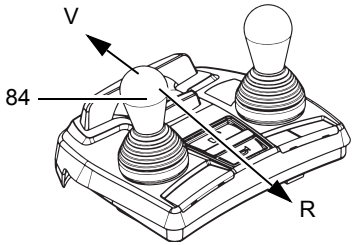

Procedure

- Pull the lever (84) in direction R to raise the load.
- Push the lever (84) in direction V to lower the load.

The load is now raised or lowered.

When the limit position for the operation has been reached (there will be a noise from the pressure relief valve) release the lever. The lever will revert automatically to neutral.

Tilting the mast forward/backward

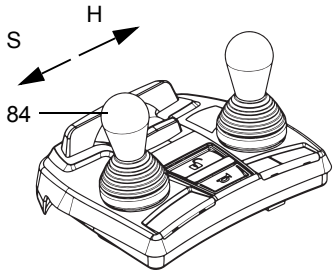

⚠ CAUTION!

Trapping hazard from inclined mast

▶ Make sure no part of your body is between the mast and driver's cab when tilting the mast back.

Requirements

– Truck prepared for operation, see page 100.

Procedure

- Push the lever (84) in direction H to tilt the mast forward.
- Pull the lever (84) in direction S to tilt the mast back.

The mast is now tilted back or forward.

When the limit position for the operation has been reached (there will be a noise from the pressure relief valve) release the lever. The lever will revert automatically to neutral.

Positioning the integrated sideshifter (option)

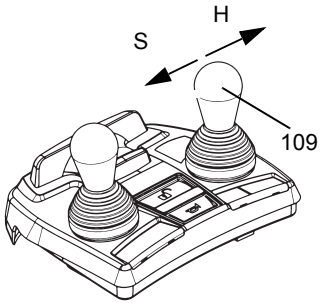

Requirements

– Truck prepared for operation, see page 100.

Procedure

- Pull the lever (109) in direction S to move the load handler to the left (from the driver's viewpoint).
- Push the lever(109) in direction H to move the load handler to the right (from the driver's viewpoint).

The sideshifter is now positioned.

➔ When the limit position for the operation has been reached (there will be a noise from the pressure relief valve) release the lever. The lever will revert automatically to neutral.

Positioning the forks with an integrated fork positioner (optional equipment)

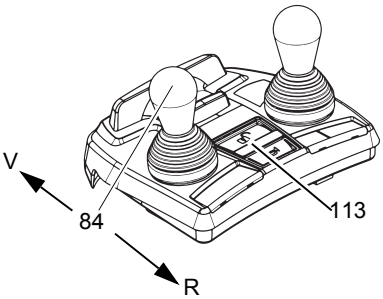

⚠ CAUTION!

Do not use the fork positioner to clamp loads.

Requirements

– Truck prepared for operation, see page 100.

Procedure

- Press and hold down the acknowledgement button (113).
- Pull the lever (84) in direction R.
  The forks move together.

- Press and hold down the acknowledgement button (113).
- Push the lever (84) in direction V.
  The forks move apart.

The forks are now positioned.

➔ When the limit position for the operation has been reached (there will be a noise from the pressure relief valve) release the lever. The lever will revert automatically to neutral.

Synchronising the forks with integrated fork positioner (optional equipment)

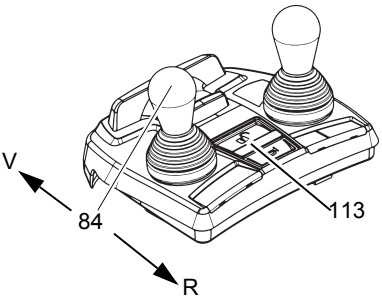

Requirements

– Truck prepared for operation, see page 100.
– The forks are no longer synchronised.

Procedure

- Press and hold down the acknowledgement button (113).
- Pull the lever (84) in direction R.
- The forks move together as far as the stop.
- Push the lever (84) in direction V.
- The forks move apart as far as the stop.

The fork are now synchronised.

➔ When the limit position for the operation has been reached (there will be a noise from the pressure relief valve) release the lever. The lever will revert automatically to neutral.

5.13 Safety instructions for operating additional attachments

Optionally, trucks can be fitted with one or more auxiliary hydraulic functions to operate attachments. The auxiliary hydraulics are indicated with ZH1 and ZH2. Auxiliary hydraulic functions for exchangeable equipment are fitted with replacement couplings on the fork carriage. To fit exchangeable equipment see page 147.

⚠ DANGER!

Attaching exchangeable equipment can result in accidents.

Other people can be injured when attaching exchangeable equipment. Use only exchangeable equipment that has been deemed safe after a risk analysis carried out by the owner.

- ▶ Only use attachments that have been designed by the attachment manufacturer for use with the respective industrial truck.
- ▶ Only use attachments that are suitable for the operating pressure and oil flow available at the hydraulic port, see page 21.
- ▶ Only use attachments that have been fitted for the purpose by the owner.
- ▶ Make sure the operator has been instructed in the use of the attachment and that he uses it for its correct purpose.
- ▶ Re-assess the residual capacity of the truck and, if it has been altered, attach an additional capacity plate to the truck.
- ▶ Note the attachment manufacturer's operating instructions.
- ▶ Use only attachments that do not restrict visibility in the travel direction.

⚠ WARNING!

Risk of accident due to overload and failure of the attachment or the load falling or becoming damaged.

When using attachments that are not suitable for the operating pressure and oil flow available, overload may give rise to damage and failure of the attachment, as well as the load falling or becoming damaged.

- ▶ Only use attachments that are suitable for the operating pressure and oil flow available at the hydraulic port, see page 21.

⚠ CAUTION!

Risk of slipping and environmental damage due to leaked hydraulic oil

When using attachments that are not suitable for the operating pressure and oil flow available, overload may give rise to leaks or broken lines with the potential for hydraulic oil leaks.

Risk of slipping due to leaked hydraulic oil. The risk is greater when combined with water.

- ▶ Only use attachments that are suitable for the operating pressure and oil flow available at the hydraulic port, see page 21.

If visibility in the travel direction is impaired, the operating company must determine and apply suitable measures to ensure the safe operation of the truck. A lookout may have to be used or certain hazardous areas may have to be cordoned off. The

truck can also be equipped with optional visual aids such as a camera system or mirrors. Travelling with visual aids requires plenty of practice at slow speed.

Safety instructions for sideshifter and fork positioner attachments

⚠ WARNING!

Restricted visibility and reduced tilt resistance can cause accidents

When using sideshifters and fork positioners, the change in centre of gravity can result in reduced lateral tilt resistance and accidents. Note that this affects visibility as well.

▶ Adapt the travel speeds to the visibility and load.

▶ Make sure you have sufficient visibility when reversing.

⚠ WARNING!

An offset load centre can result in accidents

The capacity of the truck is reduced when using side shifts that are more than 100 mm outside the truck centre.

▶ Observe the capacity plate with the reduced capacity.

Safety instructions for clamping attachments (e.g. baling clamps, barrel clamps, grabs, etc.)

⚠ WARNING!

Falling loads can cause accidents

Operating errors can occur and the load can fall accidentally.

▶ Clamping attachments may only be added to trucks which have a button to enable additional hydraulic functions.

▶ Clamping attachments must only be operated on trucks with auxiliary hydraulics ZH2.

▶ Clamping attachments must be equipped with an integrated load-holding valve.

▶ When connecting the attachment make sure that the hydraulic lines of the attachment are connected to the right connections, see page 147.

Safety instructions for rotary attachments

⚠ WARNING!

A non-centred load centre of gravity can result in accidents

When using rotary devices and non-centred loads, the centre of gravity can be displaced from the centre with a high risk of accidents.

▶ Adapt the travel speed to the load.

▶ Lift the load from the centre.

Safety instructions for telescopic attachments

⚠ WARNING!

Accident risk from increased tipover hazard and reduced residual capacity

There is a greater risk of tipover with extended telescopic attachments.

- ▶ Do not exceed the maximum loads specified on the capacity plate.
- ▶ Only use the telescopic function for stacking and retrieving.
- ▶ Retract the telescopic attachment fully during transport.
- ▶ Adapt the travel speed to changed load centre of gravity.

Safety instructions for attachments when transporting suspended loads

⚠ WARNING!

Swinging loads and a reduced residual capacity can result in accidents.

Transporting hanging loads can reduce the stability of the truck.

- ▶ Adapt the travel speed to the load, less than walking pace.
- ▶ Secure swinging loads for example with lifting slings.
- ▶ Reduce the residual capacity and have it certified by a expert.
- ▶ If the truck is to be operated with hanging loads, proof of sufficient safety distance under local operating conditions must be obtained from a specialist assessor.

Safety instructions for using loading buckets as attachments

⚠ WARNING!

Increased mast loading can cause accidents.

- ▶ When carrying out the daily checks and operations before starting, see page 79, check in particular check the fork carriage, mast rails and mast rollers for damage.

Safety instructions for fork extensions

⚠ WARNING!

Unsecured and oversized fork extensions can cause accidents.

- ▶ Only use fork extensions that are suitable and have been approved for the base forks of the truck. Observe the data on the data plates of the fork extensions and truck.
- ▶ The basic fork length must be at least 60% of the length of the fork extension.
- ▶ Push out the fork extensions fully and lock onto the basic fork arms.
- ▶ Lay the load as close to the fork shanks as possible. The distance between the overall centre of gravity of the load and the fork shank must not exceed 50% of the length of the fork extension.
- ▶ When carrying out checks and operations before daily starting, see page 79, check the fork extension lock.
- ▶ Mark any fork extensions with an incomplete or faulty lock and take them out of service.
- ▶ Do not use trucks with an incomplete or faulty fork extension lock. Replace the fork extension.
- ▶ Only restore the fork extension to service when the fault has been rectified.
- ▶ Use only fork extensions which are free of dirt and foreign bodies near the entry opening point. Clean the fork extensions as required.

➔ The weight of the fork extensions reduces the residual capacity of the truck. When determining the residual capacity, the increased load distance must be taken into account, see the data plate and capacity plate of the fork extension.

5.14 Operating additional attachments for the SOLO-PILOT

⚠ WARNING!

Incorrect symbols can cause accidents

Symbols on controls that do not depict the function of the attachments can cause accidents.

▶ Mark the controls with symbols that indicate their function.

▶ Specify the attachments' direction of movement in accordance with ISO 3691-1 so that they match the controls' direction of movement.

5.14.1 Solo Pilot with control of ZH1 and ZH2 hydraulic ports

➔ Depending on the attachments used the lever / button (134, 136, 135) is assigned the function of the attachment. Levers that are not required are void. For connections see page 147.

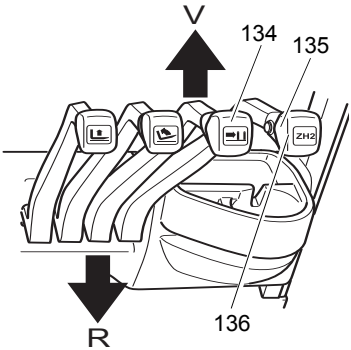

Operating hydraulic port ZH1

Procedure

- Move the lever (134) in direction V or R.
  The attachment performs its operation.

Operating hydraulic port ZH2

Procedure

- Press and hold down the acknowledgement button (135).
- Move the lever (136) in direction V or R.
  The attachment performs its operation.

5.14.2 Solo Pilot with control of ZH1, ZH2 and ZH3 hydraulic ports

Depending on the attachments used the lever / button (134, 136, 135) is assigned the function of the attachment. Levers that are not required are void. For connections see page 147.

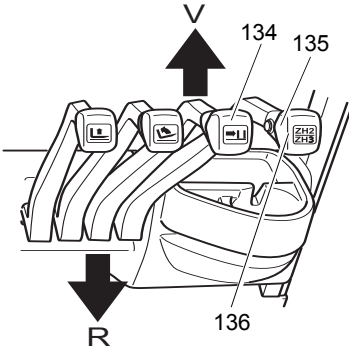

Operating hydraulic port ZH1

Procedure

- Move the lever (134) in direction V or R.
  The attachment performs its operation.

Operating hydraulic port ZH2

Procedure

- Move the lever (136) in direction V or R.
  The attachment performs its operation.

Operating hydraulic port Z3

Procedure

- Press and hold down the toggle button (135).
- Move the lever (136) in direction V or R.
  The attachment performs its operation.

5.15 Operating Additional Attachments for SOLO-PILOT on the Armrest

⚠ WARNING!

Incorrect symbols can cause accidents

Symbols on controls that do not depict the function of the attachments can cause accidents.

▶ Mark the controls with symbols that indicate their function.

▶ Specify the attachments' direction of movement in accordance with ISO 3691-1 so that they match the controls' direction of movement.

5.15.1 Solo Pilot with control of ZH1 hydraulic port

Depending on the attachments used the lever (109) is assigned the function of the attachment. Unused levers have no function. For connections see page 147.

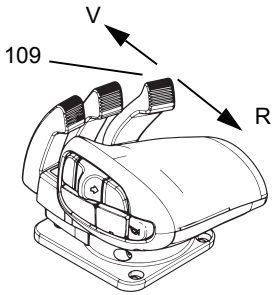

Procedure

- Operating hydraulic port ZH1:
  Move the lever (109) in direction V or R.

The attachment performs its operation.

When the limit position for the operation has been reached (there will be a noise from the pressure relief valve) release the lever. The lever will revert automatically to neutral.

5.15.2 Solo Pilot with control of ZH1 and ZH2 hydraulic ports

Depending on the attachments used, the lever/button (84,109, 113) is assigned the function of the attachment. Unused levers have no function. For connections see page 147.

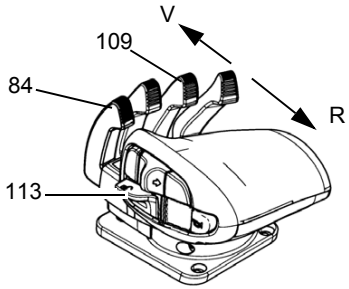

Operating hydraulic port ZH1

Procedure

- Move the lever (109) in direction V or R.

The attachment performs its operation.

Operating hydraulic port ZH2

Procedure

- Press and hold down the acknowledgement button (113).
- Move the lever (84) in direction V or R
  The attachment performs its operation.

When the limit position for the operation has been reached (there will be a noise from the pressure relief valve) release the lever. The lever will revert automatically to neutral.

5.15.3 Solo Pilot with control of ZH1, ZH2 and ZH3 hydraulic ports

Depending on the attachments used, the levers/button (84, 109, 112, 113) are assigned the respective functions. Unused levers have no function. For connections see page 147.

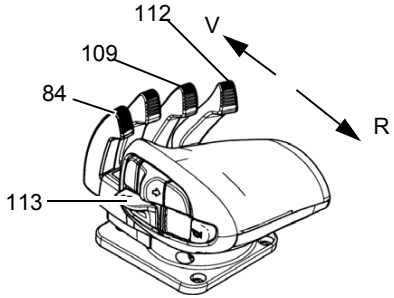

Operating hydraulic port ZH1

Procedure

- Move the lever (109) in direction V or R.
  The attachment performs its operation.

Operating hydraulic port ZH2

Procedure

- Move the lever (112) in direction V or R.
  The attachment performs its operation.

Operating hydraulic port ZH3

Procedure

- Press and hold down the acknowledgement button (113).
- Move the lever (84) in direction V or R.
  The attachment performs its operation.

When the limit position for the operation has been reached (there will be a noise from the pressure relief valve) release the lever. The lever will revert automatically to neutral.

5.16 Operating Additional Attachments for MULTI-PILOT on the Armrest

⚠ WARNING!

Incorrect symbols can cause accidents

Symbols on controls that do not depict the function of the attachments can cause accidents.

▶ Mark the controls with symbols that indicate their function.

▶ Specify the attachments' direction of movement in accordance with ISO 3691-1 so that they match the controls' direction of movement.

5.16.1 Multi Pilot with control of ZH1 hydraulic port

Depending on the attachments used, the (109) button is assigned the function of the attachment. Unused levers have no function. For connections see page 147.

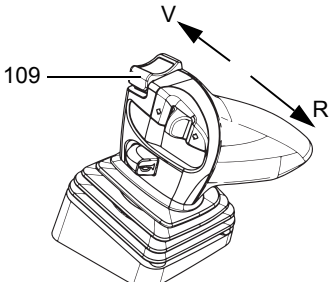

Procedure

- Operating hydraulic port ZH1:
  Press the (109) button to the left or right.

The attachment performs its operation.

When the limit position for the operation has been reached (there will be a noise from the pressure relief valve) release the lever. The lever will revert automatically to neutral.

5.16.2 Multi Pilot with control of ZH1 and ZH2 hydraulic ports

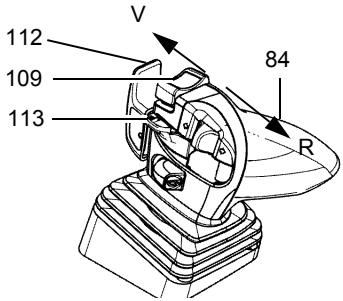

Depending on the attachments used, the lever/button (84, 109, 112, 113) is assigned the function of the attachment. Unused levers have no function. For connections see page 147.

Operating hydraulic port ZH1

Procedure

- Press the (109) button to the left or right.

The attachment performs its operation.

Operating hydraulic port ZH2

Procedure

- Press and hold down the acknowledgement button (113).
- Push the lever (84) in direction V or pull it in direction R.
  The attachment performs its operation.

When the limit position for the operation has been reached (there will be a noise from the pressure relief valve) release the lever. The lever will revert automatically to neutral.

5.16.3 Multi Pilot with control of ZH1, ZH2 and ZH3 hydraulic ports

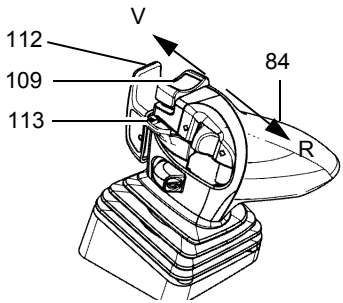

Depending on the attachments used, the levers/button (84, 109, 112, 113) are assigned the respective functions. Unused levers have no function. For connections see page 147.

Operating hydraulic port ZH1

Procedure

- Press the (109) button to the left or right.
  The attachment performs its operation.

Operating hydraulic port ZH2

Procedure

- Push the lever (112) in direction V or pull it in direction R.
  The attachment performs its operation.

Operating hydraulic port ZH3

Procedure

- Press and hold down the acknowledgement button (113).
- Push the lever (84) in direction V or pull it in direction R.
  The attachment performs its operation.

When the limit position for the operation has been reached (there will be a noise from the pressure relief valve) release the lever. The lever will revert automatically to neutral.

5.17 Operating Additional Attachments for DUO-PILOT on the Armrest

⚠ WARNING!

Incorrect symbols can cause accidents

Symbols on controls that do not depict the function of the attachments can cause accidents.

▶ Mark the controls with symbols that indicate their function.

▶ Specify the attachments' direction of movement in accordance with ISO 3691-1 so that they match the controls' direction of movement.

5.17.1 Duo-Pilot with control of ZH1 hydraulic port

Depending on the attachments used the lever (109) is assigned the function of the attachment. Unused levers have no function. For connections see page 147.

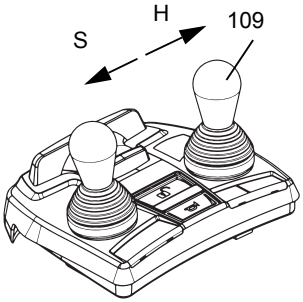

Procedure

- Operating hydraulic port ZH1:
  Press the lever (109) in direction S or H.

The attachment performs its operation.

When the limit position for the operation has been reached (there will be a noise from the pressure relief valve) release the lever. The lever will revert automatically to neutral.

5.17.2 Duo-Pilot with Control of ZH1 and ZH2 Hydraulic Ports

Depending on the attachments used, the lever/button (109,112,113) is assigned the function of the attachment. Unused levers have no function. For connections see page 147.

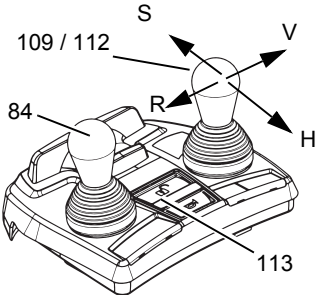

Operating hydraulic port ZH1

Procedure

- Push the lever (109) in direction V or R.
  The attachment performs its operation.

Operating hydraulic port ZH2

Procedure

- Press and hold down the acknowledgement button (113).
- Pull the lever (84) in direction H or push it in direction S.
  The attachment performs its operation.

When the limit position for the operation has been reached (there will be a noise from the pressure relief valve) release the lever. The lever will revert automatically to neutral.

5.17.3 Duo-Pilot with control of ZH1, ZH2 and ZH3 hydraulic ports

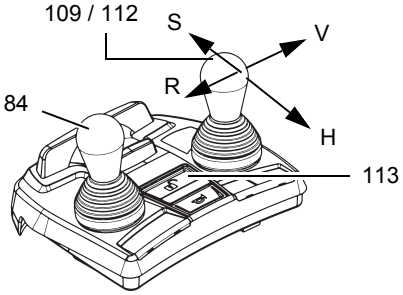

Depending on the attachments used, the levers/button (84, 109,112,113) are assigned the respective functions. Unused levers have no function. For connections see page 147.

Operating hydraulic port ZH1

Procedure

- Push the lever (109) in direction V or R.
  The attachment performs its operation.

Operating hydraulic port ZH2

Procedure

- Pull the lever (112) in direction H or push it in direction S.
  The attachment performs its operation.

Operating hydraulic port ZH3

Procedure

- Press and hold down the acknowledgement button (113).
- Pull the lever (84) in direction H or push it in direction S.
  The attachment performs its operation.

When the limit position for the operation has been reached (there will be a noise from the pressure relief valve) release the lever. The lever will revert automatically to neutral.

5.18 Fitting additional attachments

⚠ WARNING!

Incorrectly connected attachments can cause accidents.

Attachments with incorrectly connected hydraulic attachments can result in accidents.

▶ Attachments must only be assembled and commissioned by trained, specialist personnel.

▶ Observe the manufacturer's operating instructions.

▶ Before starting, check the fasteners are positioned correctly and securely and make sure they are complete.

▶ Before starting, make sure the attachment is working correctly.

Hydraulic connections

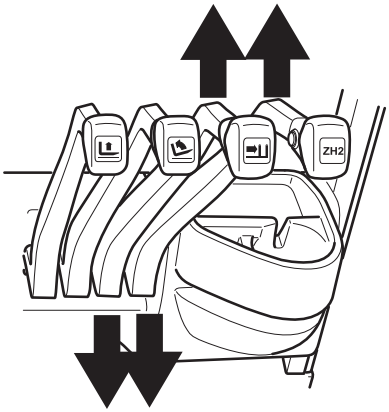

Requirements

– Non-pressurised hydraulic hoses.
– The exchange ports on the truck are marked ZH2/ZH3.
– Attachment movement directions defined to match the actuation direction of the controls.

Procedure

- Lower the fork carriage to the ground.
- Turn off the ignition (set the ignition/starter switch to position 0).
- Turn the ignition on again (set the ignition/starter switch to position I), but do not start the engine.
- Move all levers as far as they will go in both directions several times. The driver's seat must be occupied to do this. Otherwise, the control levers will remain locked in neutral.
- Connect the plug-in coupling and engage it in position.
- Mark the controls with symbols that indicate their function.

The attachment is now hydraulically connected.

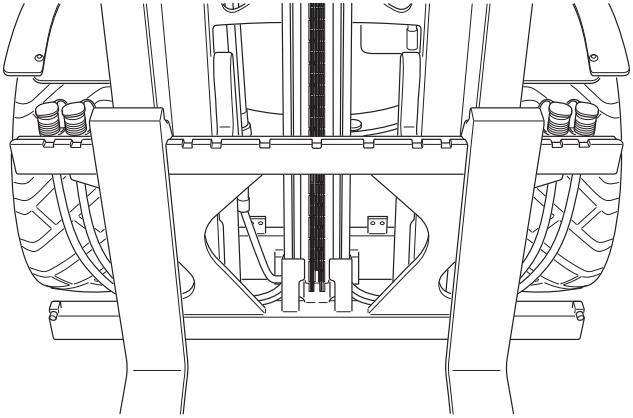

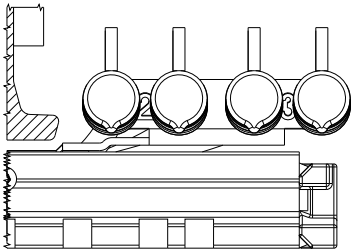

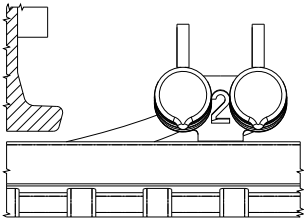

➔ Spilled hydraulic oil must be set using a suitable agent and disposed of in accordance with environmental regulations.
If hydraulic oil comes into contact with the skin, wash it off immediately with soap and water. If it comes into contact with the eyes rinse them immediately with flowing water and call for a doctor.

Depressurising the hydraulic hoses with controls on the armrest

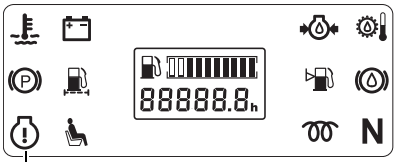

10

Requirements

– The operator is in the operating position.
– Internal combustion engine switched off.
– Parking brake activated.
– Travel direction switch in neutral.
– All controls in neutral.

Procedure

- Turn the ignition on (set the ignition/starter switch to position 1), but do not start the engine, see page 101.
- Press the control for ZH1 (auxiliary hydraulics 1) function for more than 5 seconds.
  The engine indicator (102) flashes and a beep is heard.
- Move the auxiliary hydraulics lever in both directions as far as it will go, see page 72.
  For auxiliary hydraulic functions requiring acknowledgement, the acknowledgement key must also be pressed in order to depressurise, see page 72.

  Hydraulic hoses and plug-in coupling are depressurised.
- Switch on the ignition to return to normal operating mode.

6 Towing trailers

⚠ DANGER!

Inappropriate speeds and excessive trailer loads can be dangerous

If you do not adapt your speed and / or use an excessive trailer load, the truck can pull apart when cornering and braking.

- ▶ The truck should only be used occasionally to tow trailers.
- ▶ The overall weight of the trailer should not exceed the capacity indicated on the capacity plate, see page 36. If a load is also transported on the load handler, the trailer load must be reduced by the same amount.
- ▶ Do not exceed the maximum speed of 5 km/h km/h.
- ▶ A truck must not be continually operated with trailers.
- ▶ Do not use supporting loads.
- ▶ Towing must only be performed on level, secure travel routes.
- ▶ The owner must test trailer operation with the permissible tow load by means of a trial run under the applicable operating conditions on site.

Attaching the trailer

⚠ CAUTION!

Trapping hazard

There is a trapping risk when you attach a trailer.

- ▶ Follow the instructions of the coupling manufacturer if using special trailer couplings.
- ▶ Secure the trailer to prevent it from rolling away before coupling it.
- ▶ Do not get caught between the truck and the tiller when coupling the trailer.
- ▶ The tiller must be horizontal, tilted down by no more than 10° and never facing up.

Attaching the trailer

Requirements

– Truck and trailer are on a level surface.
– Trailer prevented from rolling away.

Procedure

- Pull the tow pin (137) up and insert the tiller of the trailer into the opening.
- Insert the tow pin (137).

The trailer is now attached to the truck.

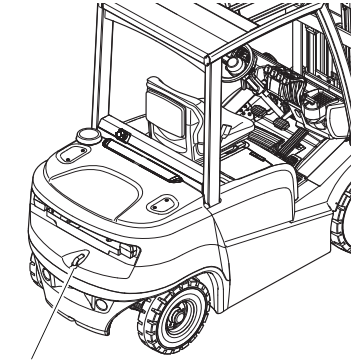

7 Optional equipment

7.1 Steel cab

⚠ CAUTION!

Open doors can result in accidents

▶ Do not travel with an open door. When opening the door, make sure there is nobody in the door's swing range.

▶ Always close the door tightly and make sure it is securely fastened.

▶ Closing the door does not release the driver from his responsibility to wear a seat belt, see page 94.

⚠ CAUTION!

Risk of crushing from the cabin door

You can trap hands or feet when the cabin door is opened and closed.

▶ Do not allow anything to come between the cabin frame/footwell and cabin door when opening and closing the cabin door.

For trucks fitted with a steel cabin, both doors can be closed.

Opening and closing the door

Procedure

- To unlock the cabin door turn the key anti-clockwise.
- To lock the cabin door turn the key clockwise.
- To open the cabin door, unlock the door and pull out the handle (138).

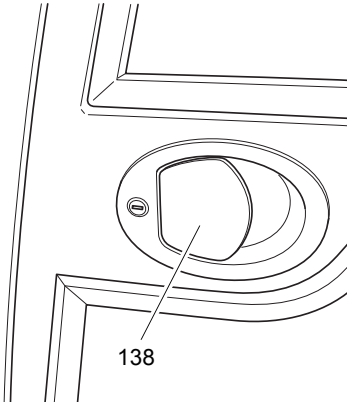

7.2 Sliding windows

⚠ CAUTION!

An unlocked sliding window can cause accidents

▶ The sliding windows must be locked at all times.

Opening and closing the windows

Procedure

- Push the lock (140) up.
- Move the window forward or back.
- Insert the lock in the stop (139).

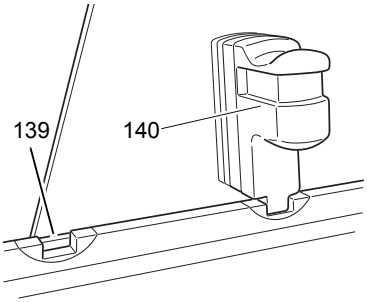

7.3 Heating

Procedure

- Turn the switch (142) to switch on the fan.
- Turn the switch (141) to control the cab temperature.

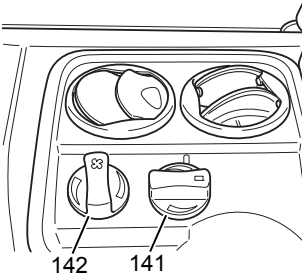

7.4 Removable load backrest

⚠ CAUTION!

Trapping hazard and heavy load backrest weight

▶ Wear safety gloves and safety shoes when carrying out this operation.

▶ Two people are required to remove and attach the load backrest.

Load backrest disassembly

Procedure

- Loosen the screws (143).
- Remove the load backrest from the fork carriage (131) and deposit it securely.
- Fit the fork retaining screws.

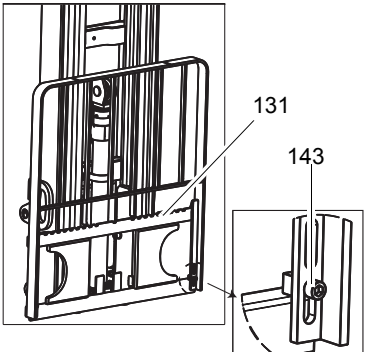

Load backrest assembly

Procedure

- Attach the load backrest to the top rail of the fork carriage.
- Fit the bolts and tighten them with a torque wrench.

➔ Tightening torque = 85 Nm

7.5 Adding window washer system fluid

Requirements

– Engine cover opened, see page 205.

Procedure

- Make sure there is sufficient windscreen washer fluid in the container (144).
- If necessary top up with anti-freeze.

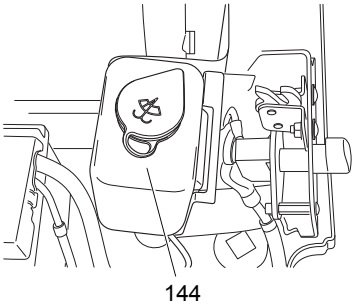

➔ Filling with weather-dependent additives.

7.6 Particle Filter (DFG)

NOTE

Check emissions at regular intervals

▶ Check the combustion engine exhaust emissions at regular intervals in accordance with national regulations.

▶ Black or blue exhaust smoke is an indicator of high emission levels resulting from combustion engine damage or wear.

▶ In this case the truck must be examined by specialist personnel.

7.6.1 Operation

The main component of the filtration system is a ceramic particle filter that mechanically filters the soot out of the diesel exhaust gas. Soot deposits result in increased exhaust back pressure during operation, meaning that the particle filter has to be regenerated. The soot is burned during regeneration. This means that the particle filter can be used only in conjunction with an external regeneration unit.

When the particle filter is full, the particle filter indicator lights up when the engine is running. An acoustic signal is also given. The operator must regenerate the particle filter in the external regeneration unit without delay.

7.6.2 Particle Filter Indicator

Symbol	Meaning	Colour	Function
	Particle filter	Lit green	Particle filter ready for use
	Particle filter	Lit red	The particle filter must be regenerated without delay

7.6.3 Regeneration

➔ The particle filter must be regenerated daily, but after 8 service hours at the latest. Depending on the engine operating conditions, regeneration may need to be performed earlier.

➔ If the particle filter needs to be regenerated at increasingly short intervals, this is a sign of elevated oil consumption and perhaps engine wear. In this case, the truck must be examined by specialist personnel.

➔ Regeneration of the particle filter lasts approx. 35 minutes. The regeneration time is not dependent on how full the particle filter is.

➔ The particle filter weighs approx. 4 kg.

7.6.4 Removing the Particle Filter

Procedure

- Park the truck securely, see page 103.

⚠ CAUTION!

Risk of burns due to hot particle filter

The particle filter becomes very hot during use and regeneration. Surface temperatures above 100°C are possible.

▶Wear gloves when removing the particle filter.

- Remove the particle filter.
  - Remove the cotter pin (146).
  - Swing the cover to one side using the handle (145).
  - Push the lever (148) up.
  - Remove the particle filter (147).

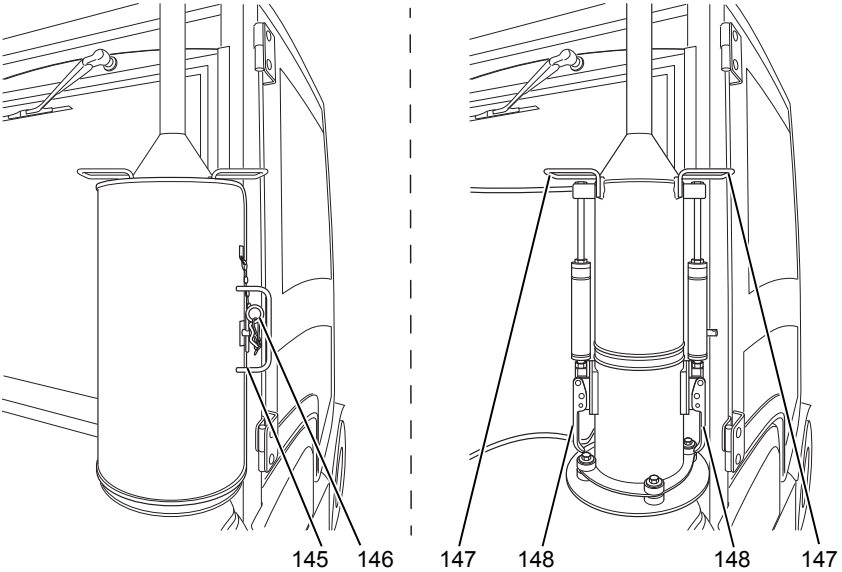

7.6.5 Regeneration Unit

⚠ CAUTION!

Increased exhaust emission levels

The particle filter must be regenerated outdoors, as higher exhaust levels are produced during regeneration.

▶ Avoid regeneration in closed rooms through regeneration suppression.

⚠ CAUTION!

Risk of electric shock

The regeneration unit must be connected to the power supply using a plug and socket that conform to the CEE standard.

▶ Do not use an earthing-contact plug.

Location and connection of the regeneration unit

⚠ CAUTION!

Risk of fire due to the regeneration unit

▶ Observe local fire safety regulations when setting up the regeneration unit.

7.6.6 Performing Regeneration

Procedure

- Place the particle filter in the regeneration unit.
- Connect the regeneration unit to the power supply.
- Press the "ON" button (149) on the regeneration unit.

  The operating status lamp lights up and regeneration begins automatically.

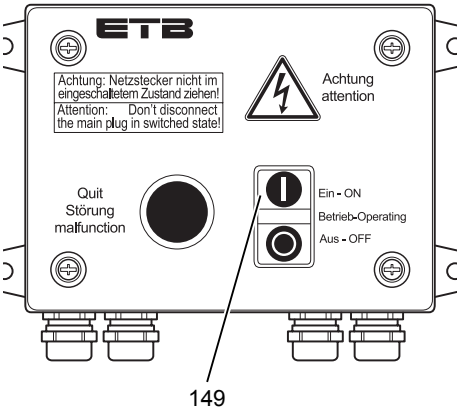

NOTE

Damage to the particle filter

The particle filter must not be used again until regeneration is complete.

▶ If regeneration is interrupted or stopped too soon, the regeneration process must be repeated.

Procedure

⚠ CAUTION!

Risk of burns due to hot particle filter

The particle filter becomes very hot during use and regeneration. Surface temperatures above 100°C are possible.

▶ Wear gloves when removing the particle filter.

➔ Regeneration is complete when the operating status lamp goes out on its own.

7.6.7 Installing the particle Filter in the Truck

Procedure

⚠ CAUTION!

Risk of burns due to hot particle filter

The particle filter becomes very hot during use and regeneration. Surface temperatures above 100°C are possible.

▶ Wear gloves when removing the particle filter.

- Remove the particle filter from the regeneration unit.
- Install the particle filter in the truck.
- Start the truck.
- Check the particle filter is free of leaks.

7.6.8 Maintenance

➔ All work performed on the particle filter system, maintenance and repairs, must be carried out only by the manufacturer's specialist service engineers. Use only spare parts approved by the manufacturer.

At regular intervals

Block the exhaust pipe and check whether the "high back pressure" lamp lights up. If the lamp does not light up, clean the connection pipe to the pressure switch.

➔ Clean fuel and oil residues from the particle filter, see page 243.

Procedure

- Regenerate the particle filter.
- Allow the particle filter to cool for 3 to 4 hours.
- Loosen the clamp on the particle filter and remove the middle section.
- Set the particle filter upright and clean it from the output side with warm water (do not use high pressure!).
- Allow the particle filter to drip off well.
- Install the particle filter with new seals.

7.7 CanCode Keypad

7.7.1 Code lock

The code lock enables an operator or a group of operators to be assigned an individual user code. The user code is configured with a master code and is outlined in the following sections of this chapter.

When you have entered the valid user code the truck will be operational. The truck will be able to perform travel, steering and hydraulic operations.

When you have entered a valid master code, the truck switches on. The code lock is in programming mode. When one of the following parameters has been entered, the settings in the code lock can be changed.

Parameter	Description
0-0-0	– To change the master code (see page 163)
0-0-1	– To add user codes (see page 165)
0-0-2	– To change a user code (see page 167)
0-0-3	– To delete a user code (see page 169)
0-0-4	– To delete all user codes (see page 171)
0-1-0	– To set the automatic truck cut-out function (see page 173)

In the as-supplied condition, the code is indicated on a sticker. When using the truck for the first time, change the master and user codes and remove the sticker.
– Default user code: 2-5-8-0
– Default master code: 7-2-9-5

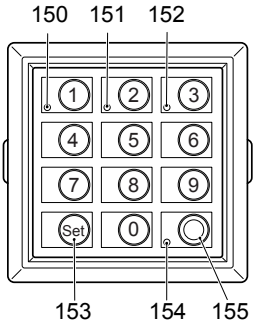

The keypad consists of 10 digit keys, a Set key (153) and a ○ key (155).

Digit keys

The digit keys are used to enter the user or master code and select the travel program.

The green LEDs of the digit keys 1, 2 and 3 (150, 151, 152) show the travel program setting.

○key

Pressing the ○ key switches off the truck.

The ○ key indicates the follow operating conditions via a red/green LED (154):
– Code lock function (commissioning the truck).
– Error display configuring the user code.
– Adjusting the travel program depending on the setting and truck.

– Setting and changing parameters.

SET key

When you change the parameters the SET key (153) acts as a confirmation key.

7.7.2 Preparing the truck for operation with the keypad (CanCode)

Preparing the truck for operation by entering a valid user code

Procedure

- Enter the user code with the digit keys.
  After entering the valid user code, the LED (154) lights up green and the truck is switched on.

➔ If the LED (154) flashes red, this means the wrong code has been entered. Enter the code again.
The Set key (153) has no function in operating mode.

7.7.3 Switching off the truck with the keypad (CanCode)

Switching off the truck

Procedure

- Press the O key (155).

The truck is switched off and the LED (154) is lit red.

➔ The truck can cut out automatically after a specified time. When a valid code is entered, the truck will be operational again. The code lock parameter responsible for automatic cut-out must be set, see page 173.

Fixed cutout time (○)

An automatic truck cutout is factory-set. The cutout time is factory-set to 5 minutes.

➔ This setting can be changed if required.

7.7.4 Changing the master code

To change the length of the master code you must follow the procedure in "Choose length of the new master code (4-6 digit) and add user codes", see page 172. If there are still user codes stored in the code lock, the master code to be changed must be the same length as the saved user codes.

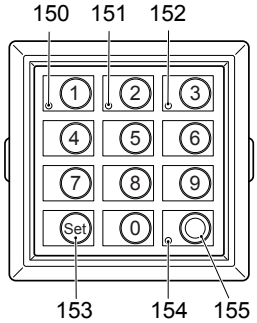

Requirements

– To prepare the truck for operation, see page 162.

Procedure

- Press the O key (155).
- Enter the valid master code with the digit keys.
  When you enter the valid master code the LED (154) flashes green.
- Enter the parameters 0-0-0 with the digit keys.
- Confirm with the SET key (153).
  The LEDs (150,154) flash green.
- Enter the valid master code again with the digit keys.
- Confirm with the SET key (153).
  The LEDs (151,154) flash green.
- Enter the valid master code with the digit keys.
  The new master code must be different from existing user codes.
- Confirm with the SET key (153).
  The LEDs (152,154) flash green.
- Enter the new master code again with the digit keys.
- Confirm with the SET key (153).
  Wait until the LED (154) flashes green. The setting is saved.
- Press the O key (155).
  The truck is switched off and the LED (154) is lit red.
- Check the new master code:
  - Switch on the truck with the new master code, see page 162
    When you enter the valid master code the LED (154) flashes green.
  - Press the O key (155).

  The truck is switched off and the LED (154) is lit red.

Error displays changing the master code

For the following events the LED (154) flashes red:

Cause	Remedy
– New master code is already occupied by a user code	– Switch off the truck, see page 162. – Choose a different master code, see page 163. – Change the user code so that the required master code can be used, see page 167. – Delete the user code so that the required master code can be used, see page 169.
– The master codes to be changed do not match	– Switch off the truck, see page 162. – Enter the master code again, see page 163.
– The master code entered is not the same length as the user code	– Switch off the truck, see page 162. – Repeat the entry, making sure that the length of the master code matches that of the user code.

7.7.5 Add operator code

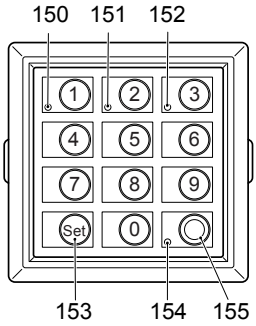

Requirements

– To prepare the truck for operation, see page 162.

Procedure

- Press the O key (155).
- Enter the valid master code with the digit keys.
  When you enter the valid master code the LED (154) flashes green.
- Enter the parameters 0-0-1 with the digit keys.
- Confirm with the SET key (153).
  The LEDs (151,154) flash green.
- Enter the new user code with the digit keys.
  The length (4-6 digit) of the new user code must be the same as that of the previously entered master code. The new user code must also be different from the existing master code.
- Confirm with the SET key (153).
  The LEDs (152,154) flash green.
- Enter the new user code again with the digit keys.
- Confirm with the SET key (153).
  Wait until the LED (154) flashes green. The setting is saved.
- Press the O key (155).
  The truck is switched off and the LED (154) is lit red.
- Check the new user code:
  - Switch on the truck with the new user code, see page 162
    After entering the valid user code the LED (154) lights up green, the travel program setting is shown by the illumination of the corresponding LEDs (150,151,152) and the truck is switched on.
  - Press the O key (155).

  The truck is switched off and the LED (154) is lit red.

Error displays adding a user code

For the following events the LED (154) flashes red:

Cause	Remedy
– The user code entered is not the same length as the master code	– Switch off the truck, see page 162. – Repeat the entry, making sure that the master code is the same length as the user code.
– New user code is already occupied by a master code	– Switch off the truck, see page 162. – Choose a different user code, see page 165.
– The newly entered user codes do not match	– Switch off the truck, see page 162. – Add the user code again, see page 165.
– Code log full.	– Switch off the truck, see page 162. – Delete individual user codes, see page 169. – Delete all user codes, see page 171.

7.7.6 Change operator code

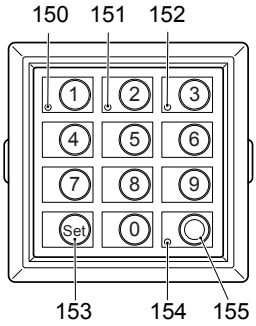

Requirements

– To prepare the truck for operation, see page 162.

Procedure

- Press the O key (155).
- Enter the valid master code with the digit keys.
  When you enter the valid master code the LED (154) flashes green.
- Enter the parameters 0-0-2 with the digit keys.
- Confirm with the SET key (153).
  The LEDs (150,154) flash green.
- Enter the user code to be changed with the digit keys.
- Confirm with the SET key (153).
  The LEDs (151,154) flash green.
- Enter the new user code with the digit keys.
  The length (4-6 digit) of the new user code must be the same as that of the previously entered master code. The new user code must also be different from the existing master code.
- Confirm with the SET key (153).
  The LEDs (152,154) flash green.
- Enter the new user code again with the digit keys.
- Confirm with the SET key (153).
  Wait until the LED (154) flashes green. The setting is saved.
- Press the O key (155).
  The truck is switched off and the LED (154) is lit red.
- Check the new user code:
  - Switch on the truck with the new user code, see page 162
    After entering the valid user code the LED (154) lights up green, the travel program setting is shown by the illumination of the corresponding LEDs (150,151,152) and the truck is switched on.
  - Press the O key (155).

  The truck is switched off and the LED (154) is lit red.

Error displays changing a user code

For the following events the LED (154) flashes red:

Cause	Remedy
– The user code entered is not the same length as the master code	– Switch off the truck, see page 162. – Repeat the entry, making sure that the master code is the same length as the user code.
– Operator code to be changed does not exist.	– Switch off the truck, see page 162. – Check the user code entered.
– The user codes to be changed do not match	– Switch off the truck, see page 162. – Change the user code again, see page 167.
– Tried to change the operator code to another user code that already exists.	– Switch off the truck, see page 162. – Choose a different user code, see page 167.

7.7.7 Delete individual user codes

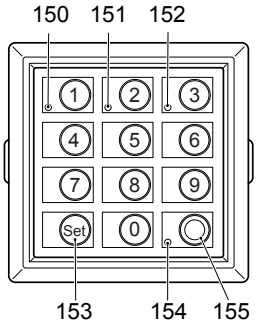

Requirements

– To prepare the truck for operation, see page 162.

Procedure

- Press the O key (155).
- Enter the valid master code with the digit keys.
  When you enter the valid master code the LED (154) flashes green.
- Enter the parameters 0-0-3 with the digit keys.
- Confirm with the SET key (153).
  The LEDs (151,154) flash green.
- Enter the user code to be deleted with the digit keys.
- Confirm with the SET key (153).
  The LEDs (152,154) flash green.
- Enter the user code to be deleted again with the digit keys.
- Confirm with the SET key (153).
  Wait until the LED (154) flashes green. The user code is now deleted.
- Press the O key (155).
  The truck is switched off and the LED (154) is lit red.
- Check that the user code has been deleted:
  - Switch the truck on with the user code to be deleted, see page 162
    After entering the user code the LED (154) flashes red and the truck remains switched off.
  - Press the O key (155).

  The truck remains switched off and the LED (154) is lit red.

Error displays deleting individual user codes

For the following events the LED (154) flashes red:

Cause	Remedy
– The user code entered is not the same length as the master code	– Switch off the truck, see page 162. – Repeat the entry, making sure that the master code is the same length as the user code.
– Tried to delete an operator code that does not exist.	– Switch off the truck, see page 162. – Check the user code entered.
– The user codes to be changed do not match	– Switch off the truck, see page 162. – Delete the user code again, see page 169.

7.7.8 Delete all user codes,

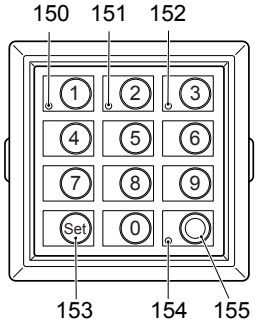

Requirements

– To prepare the truck for operation, see page 162.

Procedure

- Press the O key (155).
- Enter the valid master code with the digit keys.
  When you enter the valid master code the LED (154) flashes green.
- Enter the parameters 0-0-4 with the digit keys.
- Confirm with the SET key (153).
  The LEDs (152,154) flash green.
- Enter the code 3-2-6-5 with the digit keys.
- Confirm with the SET key (153).
  Wait until the LED (154) flashes green. All user codes are deleted.
- Press the O key (155).
  The truck is switched off and the LED (154) is lit red.
- Check that the user codes have been deleted:
  - Switch on the truck with a previous user code, see page 162.
    After entering the user code the LED (154) flashes red and the truck remains switched off.
  - Press the O key (155).

  The truck remains switched off and the LED (154) is lit red.

7.7.9 Choose length of the new master code (4-6 digit) and add user codes

The master code is factory set to a four-digit entry: If necessary, the four-digit master code can be changed to a five or six-digit entry. Before the master code length can be changed, all user codes must be deleted. The length of the user code (4-6 digit) is always determined by the length of the master code.

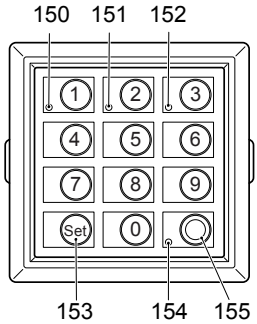

Requirements

– To prepare the truck for operation, see page 162.

Procedure

- Delete all user codes, see page 171.
- Enter the new master code (4-6 digit), see page 163.
- Add user codes again, see page 165.

The length of the new master code is now changed and user codes have been added.

7.7.10 Setting the automatic truck cutout (timeframe)

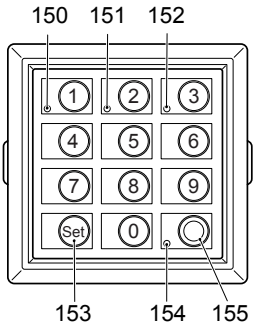

Requirements

– To prepare the truck for operation, see page 162.

Procedure

- Press the O key (155).
- Enter the valid master code with the digit keys.
  When you enter the correct master code the LED (154) flashes green.
- Enter the 0-1-0 parameter with the digit keys.
- Confirm with the SET key (153).
  Wait until the LED (154) flashes green.
- Set the truck automatic cutout (time period) with the digit keys:
  - 00:
    Automatic truck cutout is deactivated.
  - 01 - 30:
    Set time period (in minutes) after which the truck automatically cuts out (minimum cutout time is 1 minute,
    maximum cutout time is 30 minutes).
  - 31:
    After 10 seconds the truck cuts out automatically.
- Confirm with the SET key (153).
  Wait until the LED (154) flashes green. The setting is saved.
- Press the O key (155).
  The truck is switched off and the LED (154) lights up red.
- Checking the truck's automatic cutout:
  - Switch on the truck with a valid operator code, see page 162.
    When you have entered a valid operator code the LED (154) lights up green, the travel program selected is indicated by the corresponding LEDs (150,151,152) and the truck is switched on.
  - Do not perform any travel, steering or hydraulic operations with the truck.
  - Wait until the truck automatically cuts out at the end of the time period.

  The truck is switched off and the LED (154) lights up red.

Error displays setting the automatic cutout period of the truck

For the following events the LED (154) flashes red:

Cause	Remedy
– Cutout time entered is out of range	– Switch off the truck, see page 162. – Enter the time again while making sure it is within range.

Fixed cutout time (○)

An automatic truck cutout is factory-set. The cutout time is factory-set to 5 minutes.

➔ This setting can be changed if required.

7.8 Control Layout "N" on the Armrest

⚠ WARNING!

Persons standing under or on a raised load handler are at risk of accidents

Do not allow anyone to stand under or on a raised load.

▶ Do not stand on the load handler.

▶ Do not lift any persons on the load handler.

▶ Instruct other people to move out of the hazardous area of the truck.

▶ Do not stand underneath a raised and unsecured load handler.

With control layout “N”, the lift and tilt functions are swapped compared with the standard operation. The Pilot must only be operated from the driver’s seat. The operator must be trained to handle the lift mechanism and the attachments.

NOTE

▶ The lift/lower and tilt speeds are determined by the inclination of the Pilot. Do not deposit the load handler suddenly to avoid damaging the load and the racking.

Multi-Pilot

Lifting

Procedure

- Push the Multipilot to the right (direction H) to raise the load.
- Push the Multipilot to the left (direction S) to lower the load.

Tilting

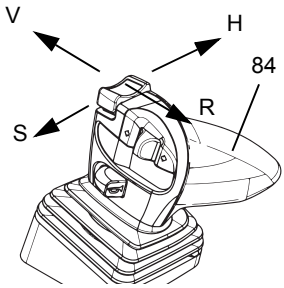

⚠ CAUTION!

Trapping hazard from inclined mast

▶ When tilting the mast back, keep all parts of your body from between the mast and the front wall.

Procedure

- Push the Multipilot forward (direction V) to tilt the load forward.
- Pull the Multipilot back (direction R) to tilt the load back.

When the limit position for the operation has been reached (there will be a noise from the pressure relief valve) release the lever. The lever will revert automatically to neutral.

Duo-Pilot

Lifting

Procedure

- Push the Duo-Pilot lever (84) to the right (direction H) to raise the load.
- Push the Duo-Pilot lever (84) to the left (direction S) to lower the load.

Tilting

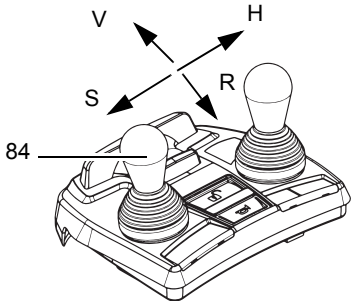

⚠ CAUTION!

Trapping hazard from inclined mast

▶ When tilting the mast back, keep all parts of your body from between the mast and the front wall.

Procedure

- Push the Duo-Pilot lever (84) forward (direction V) to tilt the load forward.
- Pull the Duo-Pilot lever (84) back (direction R) to tilt the load back.

➔ When the limit position for the operation has been reached (there will be a noise from the pressure relief valve) release the lever. The lever will revert automatically to neutral.

7.9 USB charger module in armrest

The USB charger module is designed for charging electrical devices such as smart phones etc. and is located in the storage facility in the armrest.

Connection data: 5 V, max. 1 A

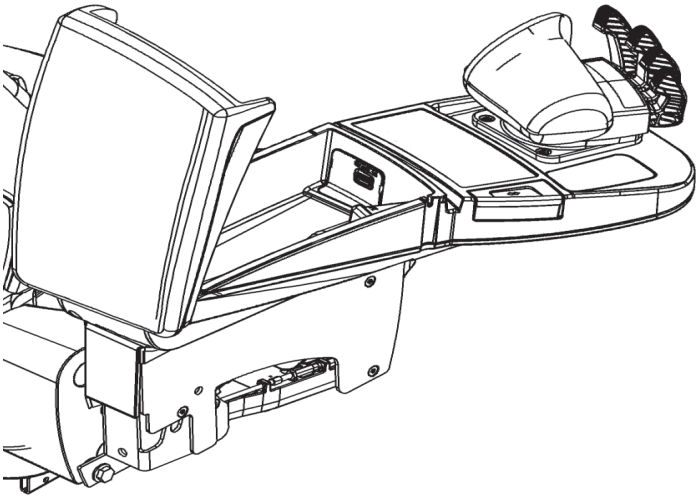

7.10 Camera system

⚠ CAUTION!

Accident risk from hidden work areas

▶ The camera system acts as an aid to assist safe operation.
▶ Practice travelling and working with the camera system.
▶ Align the camera so that the hidden work area can be seen.

When using the camera to reverse, the monitor automatically switches on when you engage reverse gear.

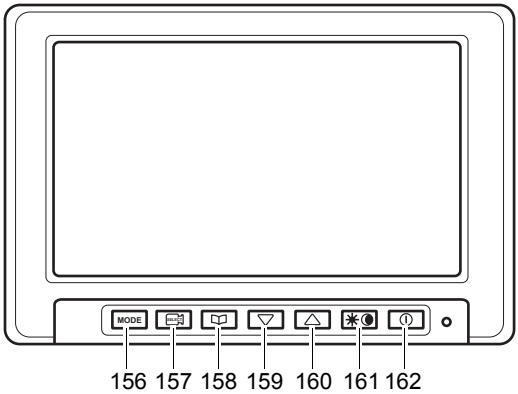

Key	Function
156	Display mode toggle
157	Camera/video input toggle
158	Menu selector key
159	Fwd. selector key
160	Back selector key
161	Brightness reduction / background lighting
162	Switch monitor on/off

Clean a dirty screen or vent slots with a soft cloth or brush.

Switch camera system on

Procedure

- Press the key (162) on the monitor.
  The camera system is switched on or off.

Sets the screen brightness

Procedure

- Press the (161) key.
  The screen becomes brighter or darker (day/night toggle).

Opening the Menu

Procedure

- Press the (158) key.
  The menu opens.

➔ Pressing the (158) key several times changes between the menu options or ends the menu.

Available menus:
– Brightness
– Contrast
– Colour saturation
– Factory setting
– Language
– Reflection
– Video
– Indicator
– Interval

Adjusting the menu items

Procedure

- Press the (160) key.
  Menu jumps forward one point.

- Press the (159) key.
  Menu jumps back one point.

7.11 Floor-Spot

⚠ **CAUTION!**

Risk of accident due to dazzling

Looking directly into the light beam of the Floor-Spot can dazzle and temporarily impair eyesight.

▶ Do not look directly into the light beam of the Floor-Spot.

▶ Do not adjust the position and alignment of the Floor-Spot on the truck.

The Floor-Spot serves as an auxiliary device and, with the travel direction selected, projects a coloured dot on the floor at a distance of 4-4,5 m.
When the truck travels forward, the coloured dot is in front of the truck. When reversing, it is behind the truck.

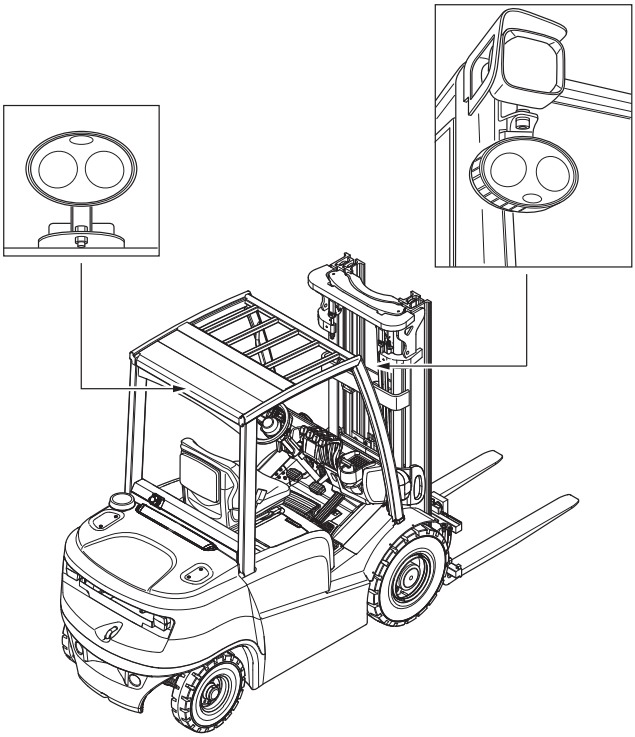

7.11.1 Additional information on Floor-Spot blue

Only for Floor-Spot blue (51466740/51631731)

The activated Floor-Spot gives persons advance warning of the travel path of the forklift truck by projecting a blue dot onto the ground at a set distance.

⚠ CAUTION!

Risk of retinal damage due to blue light

The Floor-Spot on the truck is classified in risk group 2 according to the standard IEC 62471: medium risk. In the range of 400 nm to 780 nm, blue light can potentially damage the retina of the human eye.

- ▶ Check that the warning notice: "Caution! Potentially dangerous optical radiation" is present and legible, and replace if necessary.
- ▶ Do not look directly into the light beam of the Floor-Spot.
- ▶ When performing maintenance and repairs, take the Floor-Spot out of service, e.g. by disconnecting the battery, and secure it against unintentional recommissioning.

The warning notice (163) is attached to the overhead guard or mast next to the Floor-Spot. An additional, smaller warning notice (163) is attached to the Floor-Spot.

163

7.12 Horn Button on Overhead Guard

When the horn button on the overhead guard is actuated, an acoustic signal is triggered.

➔ Use the horn button on the overhead guard only when reversing.

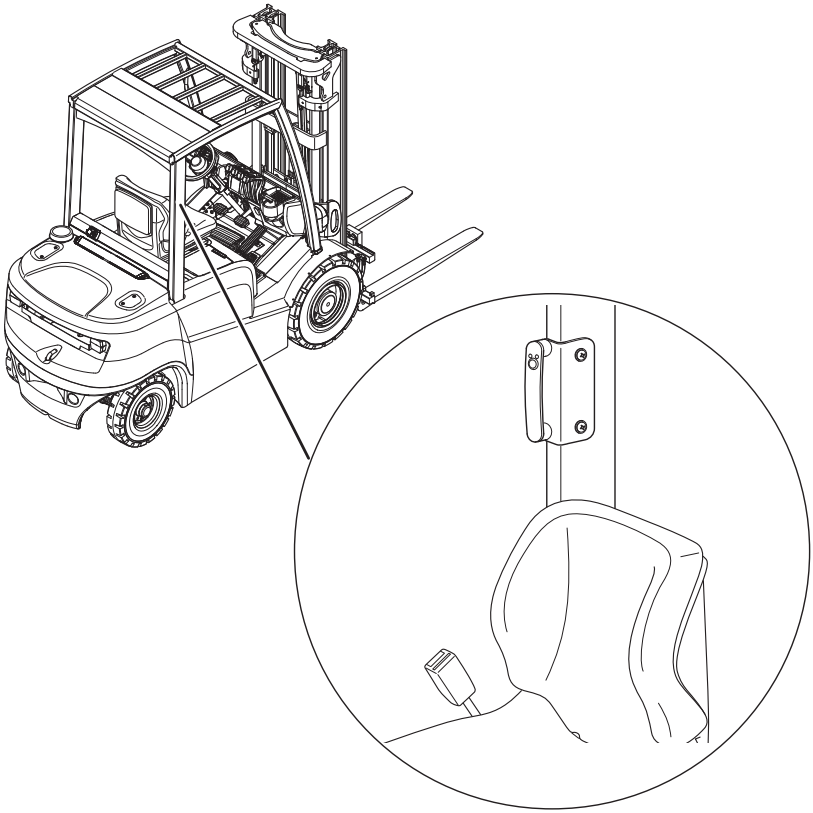

7.13 StVZO road traffic regulations equipment

⚠ CAUTION!

Requirement to use winter tyres when driving the truck on public highways (StVZO, German road traffic regulations)

The StVZO requires the use of winter tyres on trucks used on public highways.

▶ Either pneumatic or SE tyres with a minimum profile depth of 4 mm may meet the requirement.

The StVZO road traffic regulations equipment comprises the following:

- Warning indicator (164)
- Warning triangle (165)
- Forks covering (167)
- Wedge (166)

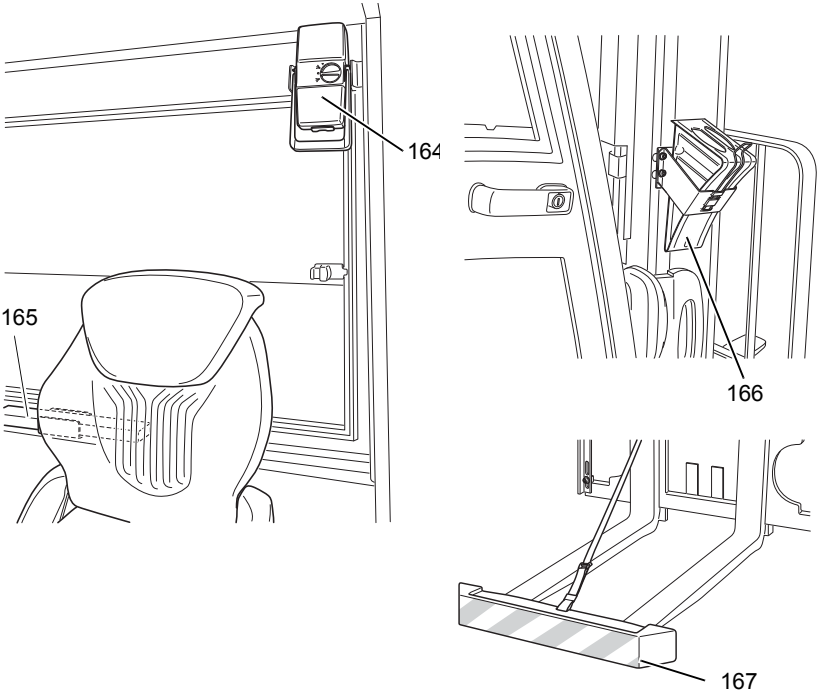

8 Troubleshooting

8.1 Troubleshooting

This chapter enables the operator to localize and rectify basic faults or the results of incorrect operation himself. When trying to locate a fault, proceed in the order shown in the table.

If the truck cannot be restored to operation despite carrying out the following remedies above, please inform the manufacturer's service department.
Additional troubleshooting must only be performed by the manufacturer's specialist personnel. The manufacturer has a service department specially trained for these tasks.
In order for customer services to react quickly and specifically to the fault, the following information is essential:
- Truck serial number
- Error description
- Current location of truck.

Operating Error Displays

Faults during operation are displayed by the following indicators:

– Coolant temperature (94)
– Charge current (95)
– Engine oil pressure (97)
– Transmission oil temperature (98)
– Engine indicator (TFG) (102) (in addition, an audible signal is given)
– Fuel/water separator (69)
– Brake oil level (99)

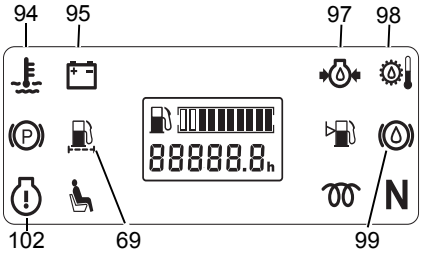

.

NOTE

Engine damage

▶ The engine must be switched off immediately.
▶ Park the truck securely.
▶ Contact the manufacturer's customer service department.
▶ The engine should only be started again once the fault has been rectified.

Fault	Possible cause	Corrective measures
Starter does not turn	Travel direction switch not in neutral	Set the travel direction switch to neutral position.
	Battery charge too low	Check battery charge and charge if necessary.
	Battery terminal cable loose or terminals oxidized.	Clean and grease terminals and tighten battery connection cable.
	Starter cable loose or broken	Check the starter motor cable.
	Fuse 1F15 faulty	Check fuse. see page 230
Engine does not start	Air filter contaminated	Clean or replace the air filter, see page 221.
	Travel direction switch not in neutral	Set the travel direction switch to neutral position.
	Additional for LPG	
	LPG bottle shut-off valve closed	Open shut-off valve, see page 59.
	LPG bottle empty	Replace the LPG bottle, see page 59.
	Spark plugs damp, oily or loose	Dry, clean and tighten spark plugs, see page 228.
	Spark plugs faulty	Replace the spark plugs, see page 228.
	Additional for diesel	
	Fuel tank empty or air in the injection system	Fill up with diesel and bleed the injection system; see page 56 or see page 224.
	Water in fuel system	Drain fuel system Fill up the truck, see page 56. Bleed the fuel system, see page 224.
	Fuel filter clogged	Check the flow of fuel and replace the fuel filter if necessary.
	Paraffin separation from the diesel (flakes forming)	Park the truck in a warm room and wait until the paraffin separation has disappeared. If necessary, replace the fuel filter. Add winter diesel.
Fuel/water separator indicator lights up	Fuel/water separator full	Drain fuel system Fill up the truck, see page 56. Bleed the fuel system, see page 224.
Engine oil indicator lights up during operation	Engine oil level too low	Check engine oil level and top up if necessary; see page 222 or see page 226.

Fault	Possible cause	Corrective measures
Engine indicator lights up during operation	Engine controller error	Contact the customer service department.
Coolant temperature indicator lights up	Engine oil level too low	Check engine oil level and top up if necessary; see page 222 or see page 226.
	Radiator contaminated	Clean the outside of the radiator.
	Coolant level too low	Check engine cooling system for leaks and add coolant if necessary, see page 217.
	Fan V belt slipping	Check V belt tension and tighten or replace as required, see page 220.
Transmission oil indicator lights up during operation	Drive axle or transmission oil level too low	Check the drive axle or transmission oil level and top up if necessary, see page 237.
	Radiator contaminated	Clean radiator.
Engine running but truck does not travel	Travel direction switch in neutral	Set travel direction switch to required direction, see page 105.
	Parking brake applied	Release the parking brake, see page 105.
Brake oil level indicator lights up	Brake oil level in reservoir too low	Check brake oil level and top up if necessary, see page 238.
Truck does not reach maximum speed	Drive axle or transmission oil level too low	Check the drive axle or transmission oil level and top up if necessary, see page 237.
Lift speed too low	Hydraulic tank oil level too low	Check hydraulic oil level and top up if necessary, see page 215.
	Hydraulic tank breather contaminated or clogged	Clean or replace hydraulic tank breather, see page 216.
Excessive steering play	Air in steering system	Check hydraulic oil level and top up if necessary, then turn the steering wheel several times from one end to the other.
Malfunction in the electrical system	Defective electrical fuse	Checking electrical fuses, see page 229.

8.2 Starting aid

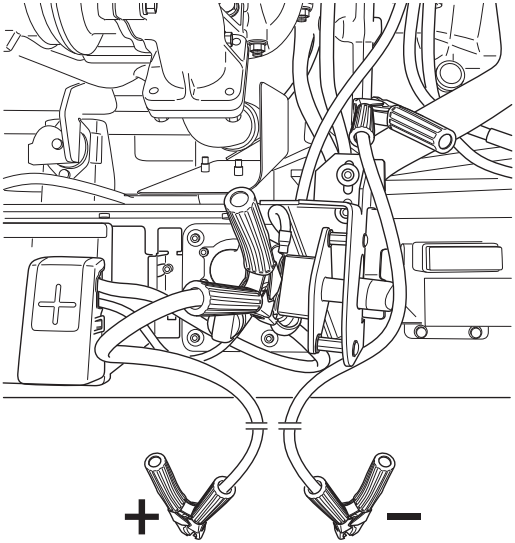

⚠ WARNING!

Danger from overheating

▶ Use only an ISO 6722 battery jump lead with fully insulated terminal clamps and a lead diameter of at least 25 mm^2.

Procedure

- Open the engine cover, see page 205.
- First of all connect the red cable to the positive terminal of the donor battery and the terminal of the battery isolator.
- Attach the black lead to the negative terminal of the donor battery and the earthing point of the transmission housing.
- Install the battery isolator.
- Start the engine.
- Remove the negative lead first and then the positive lead.

➔ If the starter motor does not switch on the engine after connecting the battery terminals, check that the battery terminal clips are positioned correctly.

8.3 Operating the truck without its own drive system

8.3.1 Towing the truck

⚠ WARNING!

Accident risk

▶ Only use vehicles to tow the truck which have sufficient tow and brake forces for the trailer load without its own braking system.

▶ Always use a pull rod to tow.

▶ Always tow the truck at walking pace.

▶ Do not park the truck with the parking brake released.

▶ One person must be seated in the recovery truck to steer it and one person must be seated on the towed truck.

NOTE

Sluggish steering

When the engine is idle the steering is sluggish.

▶ Tow the truck away slowly.

Towing the truck

Requirements

– Truck parked securely.

Procedure

- Connect the pull rod to the tow mandrel (13) of the towing truck and attach it to the truck to be towed.
- Release the parking brake, see page 189.
- Tow the truck to its destination.
- Apply the parking brake, see page 189.
- Remove the tow bar.

The truck has now reached its destination.

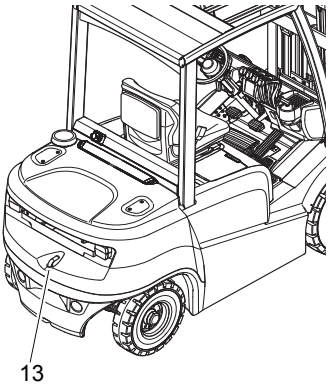

8.3.2 Release the parking brake.

⚠ WARNING!

Accidental truck movement

When the brakes are released, the truck must be parked securely on a level surface, since the brakes are no longer effective.

▶ Do not release the parking brake on slopes or inclines.

▶ Activate the parking brake again when you reach your destination.

▶ Do not park the truck with the parking brake released.

Release the parking brake

Requirements

– Turn the key switch (83) to “0”.

– Truck prevented from rolling away.

– Floor plate (168) removed, see page 210.

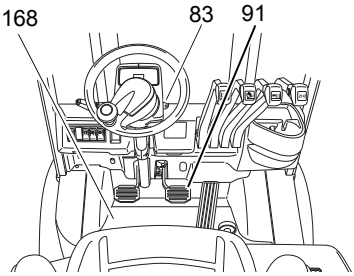

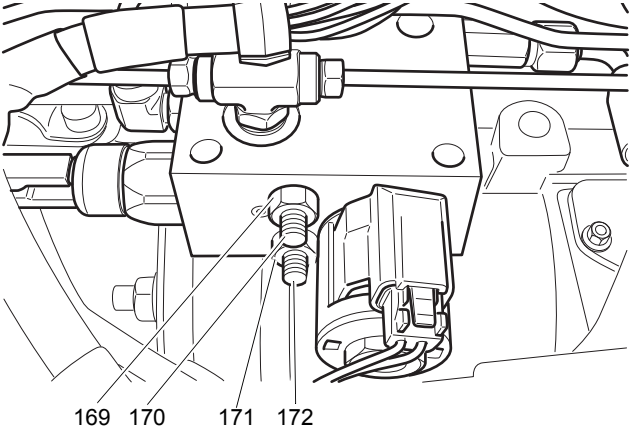

Procedure

- Loosen the bottom nut (171).
- Undo the lower screw (172) by a maximum of 3 turns.
- Loosen the top nut (169).
- Insert the top screw (170) and torque to 15 Nm.
- Apply the brake pedal (91) twice.
  Parking brake has been released, and the truck can be towed away.

➔ The service brake can still be used when the parking brake has been released.

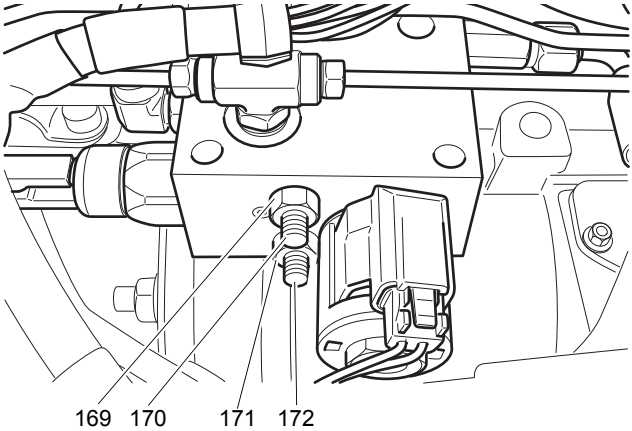

Applying the parking brake

Procedure

- Undo the top screw (169) by a maximum of 3 turns.
- Insert the bottom screw (172) and torque to 15 Nm.
- Tighten the top nut (169) and the bottom nut (171).

Parking brake is activated.

8.3.3 Emergency lowering

The load handler can be lowered manually if a fault occurs in the hydraulic controller.

⚠ WARNING!

Load handler emergency lowering

- ▶ Instruct other people to move out of the hazardous area of the truck during emergency lowering.
- ▶ Never step or stand underneath a raised load handler.
- ▶ Only operate the emergency lowering valve when standing next to the truck.
- ▶ When the load handler is in the racking, emergency lowering is not permitted.
- ▶ Report any defects immediately to your supervisor.
- ▶ Mark defective truck and take out of service.
- ▶ Do not return the industrial truck to service until you have identified and rectified the fault.

Procedure

- Turn the key switch to position "0".
- Apply the parking brake.
- Open the engine cover, see page 205.
- Remove the floor plate, see page 210.
- Loosen the screw (173) slowly by up to 1.5 turns.
- The load handler is lowered slowly.
- Torque the screw (173) to 2.5 Nm.

The load handler has been lowered.

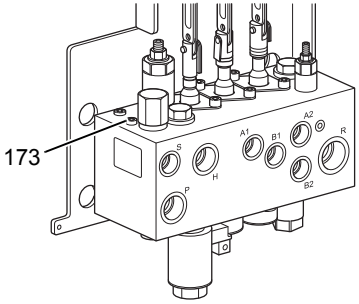

8.3.4 Emergency Lowering using Controls on the Armrest

The load handler can be lowered manually if a fault occurs in the hydraulic controller.

⚠ WARNING!

Load handler emergency lowering

- ▶ Instruct other people to move out of the hazardous area of the truck during emergency lowering.
- ▶ Never step or stand underneath a raised load handler.
- ▶ Only operate the emergency lowering valve when standing next to the truck.
- ▶ When the load handler is in the racking, emergency lowering is not permitted.
- ▶ Report any defects immediately to your supervisor.
- ▶ Mark defective truck and take out of service.
- ▶ Do not return the industrial truck to service until you have identified and rectified the fault.

Procedure

- Turn the key switch to position "0".
- Apply the parking brake.
- Open the engine cover, see page 205.
- Remove the floor plate, see page 210.
- Loosen the threaded pin (173) slowly by up to 1.5 turns.
- The load handler is lowered slowly.
- Torque the threaded pin (173) to 2.5 Nm.

The load handler has been lowered.

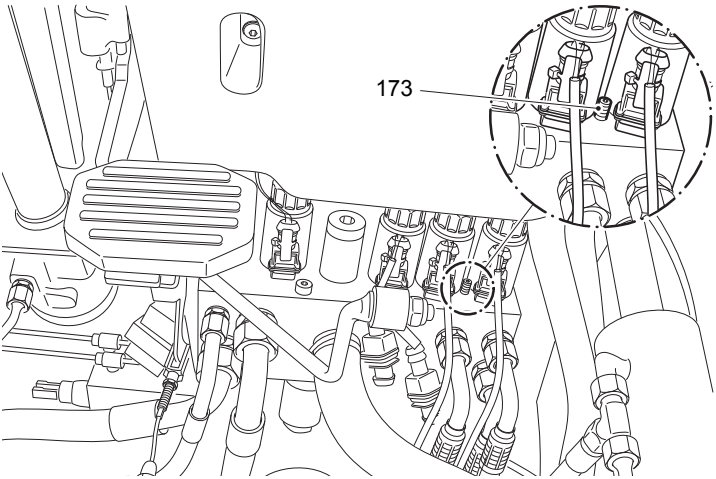

F Industrial Truck Maintenance

1 Operational Safety and Environmental Protection

The inspections and maintenance tasks listed in chapter "Maintenance, Inspection and Changing of Maintenance Parts Requiring Replacement" must be performed according to the defined service intervals (see page 243).

The manufacturer recommends the replacement of the maintenance parts also listed in chapter "Maintenance, Inspection and Changing of Maintenance Parts Requiring Replacement" according to the specified replacement intervals (see page 243).

⚠ WARNING!

Risk of accidents and damage to components

Any modification to the truck, in particular the safety mechanisms, is prohibited. Do not alter the truck's operating speeds under any circumstances.
Do not bond the front window with adhesive.

Exception: Operating companies should only make changes or have changes made to powered industrial trucks if the manufacturer is no longer operating in the field and there is no successor to the business; operating companies must however:

– Ensure that the changes to be made are planned, tested and performed by a specialist engineer in industrial trucks taking safety into account.
– Keep permanent graphic records of the plans, tests and completion of the changes
– Carry out and have authorised the respective changes to the capacity data plates, decals and stickers as well as the operator and service manuals.
– Attach permanent and clearly visible marking to the truck indicating the types of changes made, the date of the changes and the name and address of the organisation responsible for the work.

NOTE

Only original spare parts are subject to the manufacturer's quality control. To ensure safe and reliable operation, use only the manufacturer's spare parts.

For safety reasons, only components which have been specially agreed by the manufacturer for this truck may be installed near the computer, controllers and wire guidance sensors (antennae). These components (computers, controllers, wire guidance sensors (antennae)) must therefore not be replaced by similar components from other trucks of the same series.

➔ On completion of inspection and service work, carry out the operations listed in the “Recommissioning the truck after cleaning or maintenance work” section (see page 238).

2 Maintenance Safety Regulations

Maintenance and repair personnel

The manufacturer has a customer service department specially trained for these tasks. A maintenance contract with the manufacturer will support trouble-free operation.

Truck maintenance, repair work and changing of parts requiring replacement must only be carried out by specialist personnel. The activities to be carried out are divided into the following target groups.

Customer Services

Customer Services are specially trained in the use of the truck and are able to carry out maintenance and repairs independently. Customer Services are aware of the relevant standards, guidelines and safety regulations as well as potential risks.

Operating company

The maintenance personal of the operating company has the technical expertise and experience to perform the activities in the maintenance check list for the operating company. The maintenance and repair work to be performed by the operating company are also written down, see page 203.

2.1 Working on the electrical system

⚠ **CAUTION!**

Accident risk from Working on the electrical system:
Make sure the electrical system is voltage-free before starting work on it.

- ▶ Remove any rings or metal bracelets etc. before working on electrical components.
- ▶ Only trained personnel may work on the electrical system.
- ▶ Switch off the truck securely (see page 103).
- ▶ Before working on the electrical system, all precautionary measures must be taken to avoid electrical accidents.
- ▶ Remove the starter battery connecting leads to de-energise the truck.

2.2 Consumables and used parts

⚠ **CAUTION!**

Consumables and used parts are an environmental hazard
Used parts and consumables must be disposed of in accordance with the applicable environmental-protection regulations. Oil changes should be carried out by the manufacturer's customer service department, whose staff are specially trained for this task.

- ▶ Note the safety regulations when handling these materials.

2.3 Wheels

⚠ WARNING!

The use of tyres that do not match the manufacturer's specifications can result in accidents.

The quality of tyres affects the stability and performance of the truck.

Uneven wear affects the truck's stability and increases the stopping distance.

▶ When replacing tyres make sure the truck is not skewed.

▶ Always replace tyres in pairs, i.e. left and right at the same time.

➔ When replacing rims and tyres fitted at the factory, only use the manufacturer’s original spare parts. Otherwise the manufacturer’s specifications cannot be ensured. If you have any queries contact the manufacturer's customer service department.

2.4 Lift Chains

⚠ WARNING!

Risk of accident from non-lubricated and incorrectly cleaned lift chains

Lift chains are safety-critical parts. Lift chains must not show signs of serious contamination. Lift chains and pivot pins must always be clean and sufficiently lubricated.

▶ The lift chains are cleaned by wiping or brushing. Significant contamination can be softened by a paraffin derivative such as petroleum.

▶ Do not clean lift chains with high-pressure steam jets or chemical cleaning agents.

▶ Immediately after cleaning, dry the lift chain with compressed air and apply a chain spray.

▶ Lift chains must be unloaded when lubricated; to do this, fully lower the load handler.

▶ Lubricate a lift chain with particular care around the pulleys.

➔ The intervals stated in the service checklist apply to normal duty use. More demanding conditions (dust, temperature) require more regular lubrication of the lift chains. The prescribed chain spray must be used in accordance with the instructions. Applying grease externally will not provide sufficient lubrication of the lift chains.

2.5 Hydraulic system

⚠ WARNING!

Leaky hydraulic systems can result in accidents

Hydraulic oil can escape from leaky and faulty hydraulic systems.

- ▶ Report any defects immediately to your supervisor.
- ▶ Mark defective truck and take out of service.
- ▶ Do not return the industrial truck to service until you have identified and rectified the fault.
- ▶ Remove any spilled hydraulic immediately with an appropriate bonding agent.
- ▶ The bonding agent / consumable mixture must be disposed of in accordance with regulations.

⚠ WARNING!

Faulty hydraulic hoses can result in injury and infection

Pressurised hydraulic oil can escape from fine holes or hairline cracks in the hydraulic hoses. Brittle hydraulic hoses can burst during operation. People standing near the truck can be injured by the hydraulic oil.

- ▶ Call for a doctor immediately in the event of an injury.
- ▶ Do not touch pressurised hydraulic hoses.
- ▶ Report any defects immediately to your supervisor.
- ▶ Mark defective truck and take it out of service.
- ▶ Do not return the industrial truck to service until you have identified and rectified the fault.

NOTE

Testing and replacing hydraulic hoses

Hydraulic hoses can become brittle through age and must be checked at regular intervals. The application conditions of the industrial truck have a considerable impact on the ageing of the hydraulic hoses.

- ▶ Check the hydraulic hoses at least annually and replace if necessary.
- ▶ If the operating conditions become more arduous the inspection intervals must be reduced accordingly.
- ▶ In normal operating conditions a precautionary replacement of the hydraulic hoses is recommended after 6 years. The owner must carry out a risk assessment to ensure safe, prolonged use. The resulting protection measures must be observed and the inspection interval reduced accordingly.

2.6 Working in the vicinity of the engine

⚠ WARNING!

Rotating and hot components can cause trapping and burning hazards when the engine is running.

When the cover is open, rotating and hot components are freely accessible and can cause injury if touched.

- ▶ Before starting work, make sure that the battery isolator can be reached to switch off the engine.
- ▶ Do not touch moving parts (e.g. fans, belt drives etc.) or hot surfaces.
- ▶ Truck maintenance and repair work must only be carried out by specially trained personnel who have been authorised by the owner.

⚠ WARNING!

Danger from hot fluids and components

- ▶ Consumables (hydraulic oil, engine oil, coolant) and power train components (engine, manifold, exhaust system, turbo charger etc.) get very hot during operation.
- ▶ When carrying out maintenance and repairs wear suitable protective clothing (gloves etc.) to avoid getting burned.

---

3 Lubricants and Lubrication Schedule

3.1 Handling consumables safely

Handling consumables

Consumables must always be handled correctly. Follow the manufacturer's instructions.

⚠ WARNING!

Improper handling is hazardous to health, life and the environment

Consumables can be flammable.

- ▶ Keep consumables away from hot components and naked flames.
- ▶ Always keep consumables in prescribed containers.
- ▶ Always fill consumables in clean containers.
- ▶ Do not mix up different grades of consumable. The only exception to this is when mixing is expressly stipulated in the operating instructions.

⚠ CAUTION!

Spilled consumables can cause slipping and endanger the environment

Risk of slipping from spilled consumables. The risk is greater when combined with water.

- ▶ Do not spill consumables.
- ▶ Spilled consumables must be removed immediately with an appropriate bonding agent.
- ▶ The bonding agent / consumable mixture must be disposed of in accordance with regulations.

⚠ WARNING!

Diesel fuel can be hazardous

- ▶ Diesel fuel can cause irritation if it comes into contact with the skin. Rinse any affected areas thoroughly.
- ▶ If it comes into contact with the eyes rinse them immediately with flowing water and call for a doctor.
- ▶ Wear safety gloves when handling diesel fuels.

⚠ WARNING!

Improper handling of oils can be hazardous

Oils (chain spray / hydraulic oil) are flammable and poisonous.

- ▶ Dispose of used oils in accordance with regulations. Store used oil safely until it can be disposed of in accordance with regulations.
- ▶ Do not spill oil.
- ▶ Spilled oils must be removed immediately with an appropriate bonding agent.
- ▶ The mixture consisting of the bonding agent and oil must be disposed of in accordance with regulations.
- ▶ Observe national regulations when handling oils.
- ▶ Wear safety gloves when handling oils.
- ▶ Prevent oil from coming into contact with hot motor parts.
- ▶ Do not smoke when handling oil.
- ▶ Avoid contact and digestion. If you swallow oil do not induce vomiting but seek medical assistance immediately.
- ▶ Seek fresh air after breathing in oil fumes or vapours.
- ▶ If oil has come into contact with your skin, rinse your skin with water.
- ▶ If oil has come into contact with your eyes, rinse them with water and seek medical assistance immediately.
- ▶ Replace oil-soaked clothing and shoes immediately.

⚠ CAUTION!

Consumables and used parts are an environmental hazard

Used parts and consumables must be disposed of in accordance with the applicable environmental-protection regulations. Oil changes should be carried out by the manufacturer's customer service department, whose staff are specially trained for this task.

- ▶ Note the safety regulations when handling these materials.

3.2 Lubrication Schedule

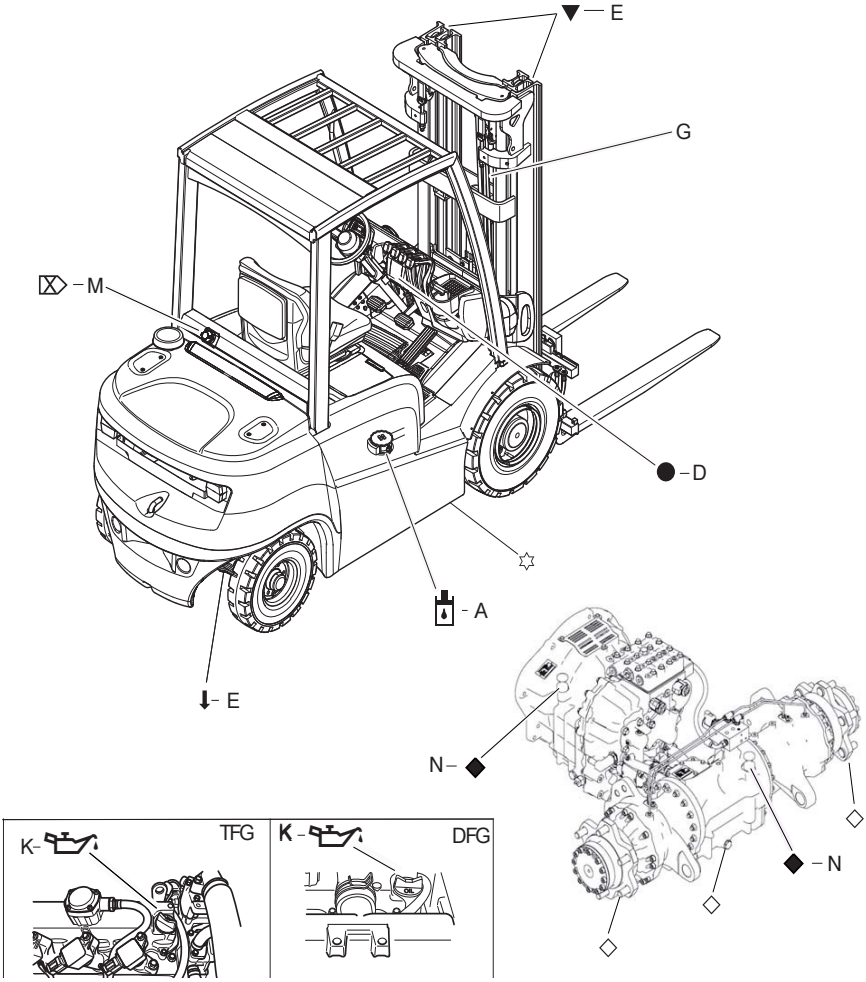

▼	Contact surfaces	◆	Filler cap for transmission / drive axle oil
⬇	Grease nipple	◇	Drain plug for transmission / drive axle oil
	Hydraulic oil filler cap	●	Filler cap for brake oil / brake system
	Hydraulic oil drain plug		Engine oil filler cap
	Coolant filler cap		

3.3 Consumables

⚠ WARNING!

The use of incorrect brake oil can be hazardous

The use of brake fluid can cause the brakes to fail.

▶ Use only brake oil in accordance with the consumables chart.

	Order no.	Quantity	Capacity	Component	Used for	Minimum requirement
A	51132826	1 l	316/320: 32 L 425-430: 36 L	Jungheinrich hydraulic oil	Hydraulic System	ISO VG 32
	51132827	5 l				
	51188578	20 l				
A[1)]	51380210	5 l		Renolin MR 68 MC		ISO VG 68
A[2)]	51380205	5 l		Renolin xtreme Temp 32		
D	50124052	5 l	0.25 l	Titan ATF 3000	Brake system	ATF Dexron II or III
E	14038650	400 g		Grease K-P-2K	Steer axle, universal joint	NLGI2-LM, NLGI2-CS, K P-2-K
G	29201280	400 ml		Chain spray	Mast chains	
N	50124052	5 l	17 l	Titan ATF 3000	Transmission and drive axle	ATF Dexron II or III
K	51219998	5 l	9.5 l	Titan UNIMAX PLUS MC SAE 10W-40	Engine oil	DFG: API classification: CF, CF-4, CG-4, CH-4 or CL-4
			7.5 l			TFG: API classification: SL or better
M	51115303	1 l	9,5 l *	Fricofin S	Coolant*	Ethylene glycol-based antifreeze; not aggressive against aluminium and EPDM

[1)] This hydraulic oil is used in permanent ambient temperatures in excess of 30°C.

[2)] This hydraulic oil is used in permanent ambient temperatures below 0°C.

* The coolant consists of a 1:1 mixture ratio of Fricofin S and demineralised water.

➔ The volumes indicated are approximate.

⚠ WARNING!

Using incorrect hydraulic oil can be dangerous

▶ Do not use hydraulic oils with a different specification or viscosity and do not mix with additives.

Grease guidelines

Code	Saponification	Dew point °C	Worked penetr. at 25°C	NLG1 class	Application temperature °C
E	Lithium	185	265-295	2	-35/+120

Coolant Specification

The quality of the coolant used can have a major impact on the efficiency and service life of the cooling circuit. The recommendations listed below are useful for servicing a good cooling circuit with anti-freeze and/or anti-corrosion.

➔ Always use clean, demineralised water.

⚠ DANGER!

Anti-freeze is poisonous

▶ Anti-freeze contains ethylene glycol and other components which can result in poisoning if ingested.

▶ Ingression into the human body can also result if poisonous quantities come into contact with the skin for long or repeated periods.

▶ Note the manufacturer's safety instructions.

The quality of the anti-freeze must be checked at least annually, e.g. at the start of the cold season.

If the correct procedures are not applied, the manufacturer cannot be held liable for frost or corrosion damage.

NOTE

Corrosion damage

▶ Even if the coolant cannot freeze up due to the application conditions, you must still use anti-freeze. The anti-freeze provides protection against corrosion and raises the boiling point of the coolant.

NOTE

Anti-freeze/water mixture ratio:

▶ 1: 1 (anti-freeze to -35°C)

▶ Never mix different types of anti-freeze.

---

4 Maintenance and repairs

4.1 Preparing the truck for maintenance and repairs

⚠ WARNING!

Risk of accidents when working under the load handler, driver's cab and lift truck

▶ When working under a raised load handler, driver's cab or a raised truck, secure them to prevent the truck from from lowering, tipping or sliding away.

▶ When raising the truck, follow the instructions, see page 204. When working on the parking brake, prevent the truck from accidentally rolling away (e.g. with wedges).

All necessary safety measures must be taken to avoid accidents when carrying out maintenance and repairs. The following preparations must be made:

Procedure

- Switch off the truck securely, see page 103.
- Fully lower the load handler.
- Remove the key from the key switch (83) to prevent the truck from being switched on accidentally.

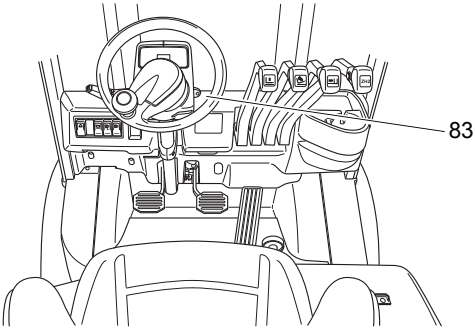

4.2 Lifting and jacking up the truck safely

⚠ WARNING!

A truck tipover can cause accidents

In order to raise the truck, use only suitable lifting gear at the points specially provided for this purpose.

▶ Note the weight of the truck on the data plate.

▶ Always use a jack with a minimum capacity of 3000 kg kg.

▶ Raise the unladen truck on a level surface.

▶ When raising the truck, take appropriate measures to prevent it from slipping or tipping over (e.g. wedges, wooden blocks).

Raising and jacking up the truck securely

Requirements

– Prepare the truck for maintenance and repairs (see page 203).

Tools and Material Required

– Jack

– Hard wooden blocks

Procedure

- Place the jack against the contact point.
  Jack contact point, see page 36.
- Raise the truck.
- Support the truck with hard wooden blocks.
- Remove the jack.

The truck is now securely raised and jacked up.

4.3 Opening the Engine Cover

Open the engine cover

Requirements

– For trucks with a closed cab, open both cab doors (○) and the rear windscreen (○) before lifting the engine cover.

Procedure

- Push the driver s seat fully forward.
- Swing the steering column forward.
- Turn and remove the battery isolator (93).
- Press the pushbutton (174) to unlock the engine cover.
- Lift up the engine cover (15) fully. The lower section of the gas strut (175) engages and holds the engine cover in position.

The engine cover is now open.

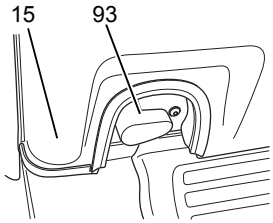

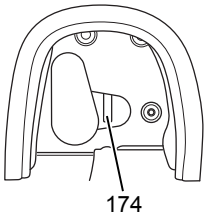

Closing the engine cover

Procedure

- Raise the engine cover slightly and push the bottom section (175) of the gas pressure damper in the direction of the arrow as far as it will go against the top part of the gas pressure damper.
- Push the engine cover down and allow it to lock in place. Push the driver`s seat back and lock it in place.
- To adjust the seating position and steering wheel position to your requirements, see page 82.

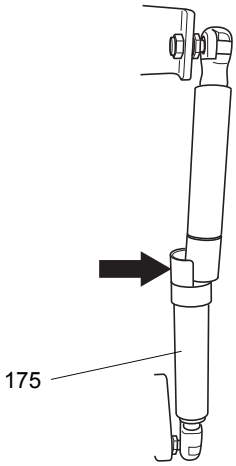

4.4 Opening the Engine Cover with Comfort Seat (○)

Preparing the seat

Requirements

– For trucks with a closed cab, open both cab doors before lifting the engine cover (○).

Procedure

- Open the rear windscreen.
- Push the seat forward.
  - Pull the seat locking lever (120) up.
  - Push the driver's seat forward.
  - Engage the seat locking lever (120).
- Fold the seat backrest back.
  - Pull the lever (118) to adjust the backrest.
  - Fold the backrest back.
  - Release the lever (118) again. The backrest is locked.
- Push down the backrest extension.

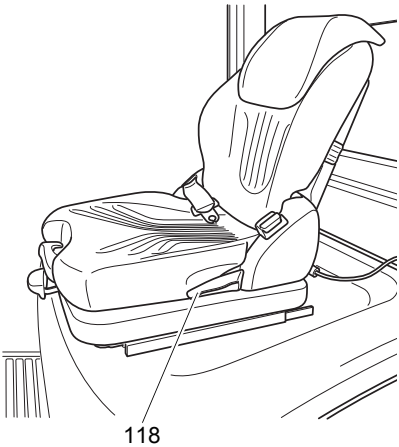

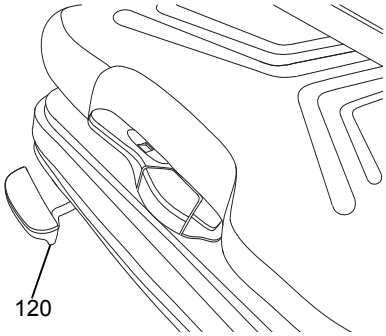

Opening the engine cover (first stage)

Requirements

– For trucks with a closed cab, open both cab doors before lifting the engine cover (○).

Procedure

- Turn and remove the battery isolator (93).
- Press the pushbutton (174) to unlock the engine cover.
- Lift the engine cover (15).

➔ The backrest swings under the open rear windscreen.

- Open the engine cover until the backrest touches the frame of the rear windscreen.

➔ The lower section of the gas strut (175) engages and holds the engine cover in position.

The engine cover has been opened in the first stage.

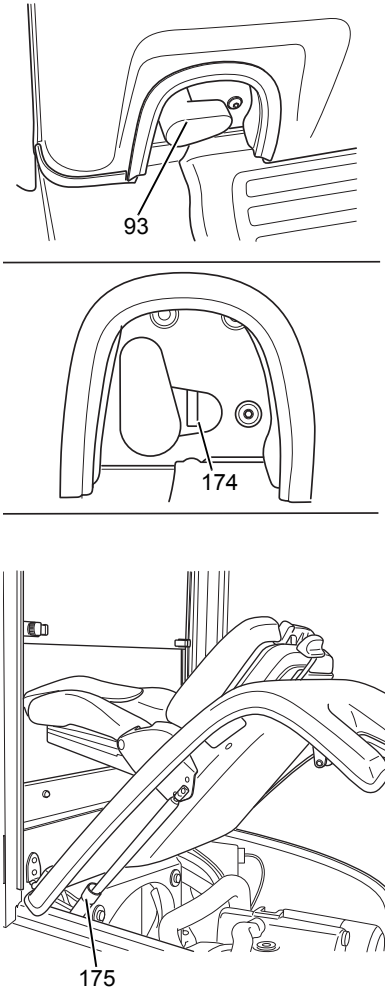

Opening the engine cover (second stage)

Requirements

– The engine cover has been opened in the first stage.

Procedure

- Unlock the backrest with the lever (118) and fold it forward.
- Open the engine cover.

➔ The backrest slides over the frame of the rear windscreen.

➔ The engine cover is fully opened when the seat cushion touches the rear windscreen.

The engine cover has been opened in the second stage.

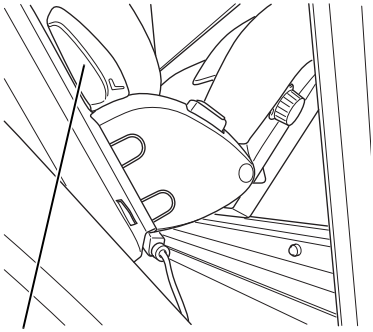

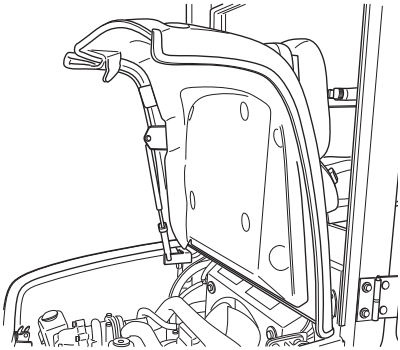

Closing the engine cover

Procedure

- Unlock the backrest with the lever (118) and start closing the engine cover (15).

➔ The backrest is pressed up by the frame of the rear windscreen so that it slides over it.

- Close the engine cover (15) further.
- Push the lower section (175) of the gas strut in the direction of the arrow as far as it will go against the upper section of the gas strut.
- Press the engine cover (15) down until it locks in place.
- Push the driver's seat back and lock it in place.
- Adjust the seating position and steering wheel position to your requirements, see page 82.

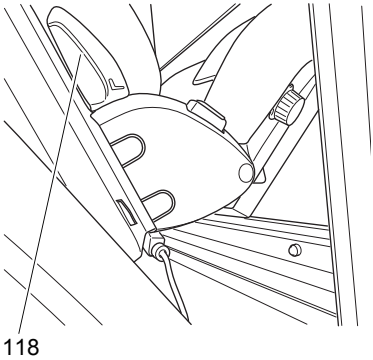

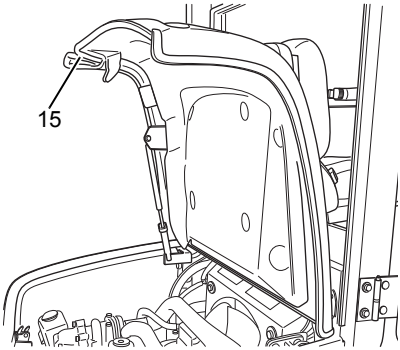

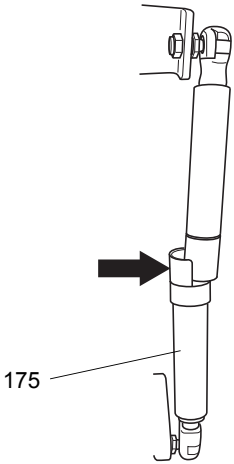

4.5 Removing the Covers

Requirements

– Engine cover opened, see page 205.

Procedure

- Tilt the rear cover (177) to the side and lift it out.
- Pull the front cover (176) towards the rear and then swing it up to remove it.

The covers have been removed.

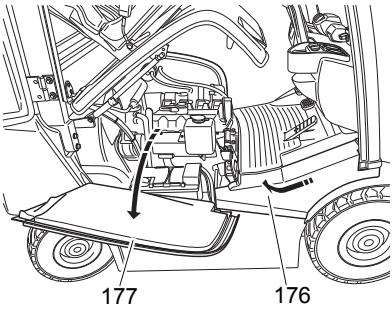

4.6 Removing the Floor Plate

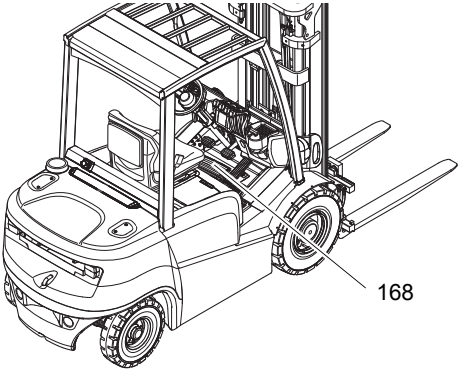

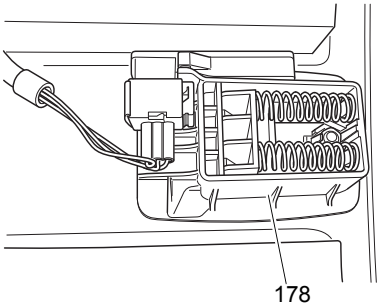

Requirements

– Engine cover opened, see page 205.

Procedure

- Lift up the floor plate (168).
- Unplug the connector (178) (only on TFG).
- Remove the floor plate (168).

The floor plate has been removed.

4.7 Replacing wheels

⚠ WARNING!

A truck tipover can cause accidents

In order to raise the truck, use only suitable lifting gear at the points specially provided for this purpose.

▶ Note the weight of the truck on the data plate.

▶ Always use a jack with a minimum capacity of 3000 kg kg.

▶ Raise the unladen truck on a level surface.

▶ When raising the truck, take appropriate measures to prevent it from slipping or tipping over (e.g. wedges, wooden blocks).

⚠ WARNING!

Falling wheels can cause injury

▶ The wheels of the truck are very heavy. A single wheel can weigh up to 150 kg.

▶ Always replace wheels with a suitable tool and protective equipment.

Removing the wheels

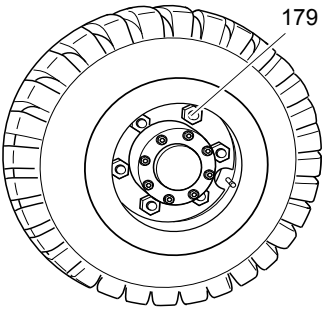

Requirements

– Prepare the truck for maintenance and repairs (see page 203).

Tools and Material Required

– Jack
– Hard wooden blocks
– Mounting lever
– Torque wrench

Procedure

- Place the jack against the contact point.
  Jack contact point, see page 36.
- Raise the truck.
- Support the truck with hard wooden blocks.
- Undo the wheel attachment (179).
- Remove the wheel, using a suitable mounting lever if necessary.

The wheel has now been removed.

Fitting the wheels

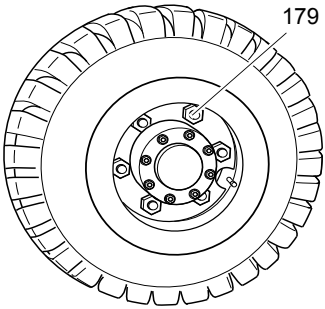

Procedure

- Fit the wheel using a suitable mounting lever if necessary.
- Fit the wheel attachment.
- Remove the hard wooden blocks.
- Lower the truck.
- Torque the wheel attachment (179) crosswise with a torque wrench; tightening torques see page 32.

The wheel has now been fitted.

➔ When using pneumatic tyres check the air pressure, for the air pressure see page 32

4.8 Checking the Wheel Mounting

⚠ WARNING!

Using different tyres can cause accidents

The quality of the tyres affects the operational stability and performance of the truck.

▶ The diameter of the wheels must differ by no more than 15 mm.

▶ Always replace tyres in pairs, i.e. left and right at the same time. After replacing the tyres check the wheel nuts are secure after 10 service hours.

▶ Always use tyres of the same make, model and profile.

Checking the mounting of wheels

Requirements

– Prepare the truck for maintenance and repairs (see page 203).

Tools and Material Required

– Torque wrench

Procedure

- Torque the wheel nuts (179) crosswise with a torque wrench; tightening torques see page 32.

The mounting of wheels is now checked.

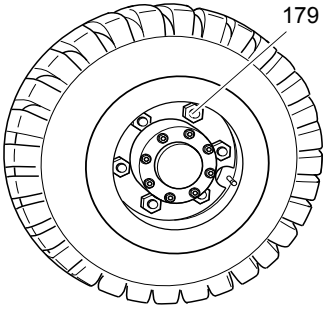

➔ When using pneumatic tyres check the air pressure, for the air pressure see page 32

4.9 Hydraulic system

⚠ **CAUTION!**

The hydraulic oil is pressurised during operation and is a hazard to health and to the environment.

- ▶ Do not touch pressurised hydraulic lines.
- ▶ Dispose of used oil in accordance with regulations. Store used oil safely until it can be disposed of in accordance with regulations.
- ▶ Do not spill hydraulic oil.
- ▶ Remove any spilled hydraulic immediately with an appropriate bonding agent.
- ▶ The bonding agent / consumable mixture must be disposed of in accordance with regulations.
- ▶ Observe national regulations when handling hydraulic oil.
- ▶ Wear safety gloves when handling hydraulic oil.
- ▶ Prevent hydraulic oil from coming into contact with hot motor parts.
- ▶ Do not smoke when handling hydraulic oil.
- ▶ Avoid contact and digestion. If you swallow oil do not induce vomiting but seek medical assistance immediately.
- ▶ Seek fresh air after breathing in oil fumes or vapours.
- ▶ If oil has come into contact with your skin, rinse your skin with water.
- ▶ If oil has come into contact with your eyes, rinse them with water and seek medical assistance immediately.
- ▶ Replace oil-soaked clothing and shoes immediately.

⚠ **CAUTION!**

Consumables and used parts are an environmental hazard

Used parts and consumables must be disposed of in accordance with the applicable environmental-protection regulations. Oil changes should be carried out by the manufacturer's customer service department, whose staff are specially trained for this task.

- ▶ Note the safety regulations when handling these materials.

4.9.1 Checking the hydraulic oil level

Requirements

– Park the truck on a level surface.
– Start the motor and fully raise and lower the mast once.
– Switch off the engine.

Procedure

- Remove the hydraulic oil dipstick (180), wipe it with a clean cloth and put it back.
- Insert (do not screw in) the hydraulic oil dipstick, remove it and check the hydraulic oil level.

➔ For cold oil: the oil level should lie between the “Min.” and “Max.” mark.

For hot oil: the oil level should lie just above the "Max" mark.

- Add hydraulic oil if necessary.
- Repeat the test.
- When the oil level is correct, fully insert the hydraulic oil dipstick (180) again.

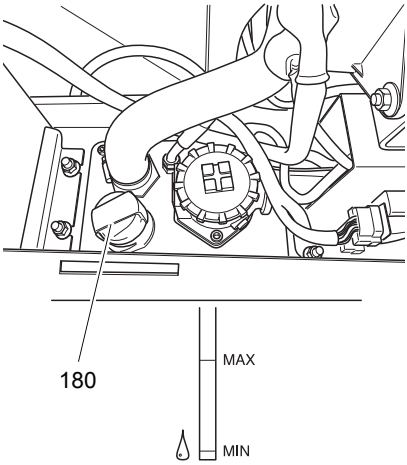

4.9.2 Adding hydraulic oil

Procedure

- Unscrew the lid (181) of the hydraulic filter.
- Add hydraulic oil to the MAX mark on the hydraulic oil dipstick (180).

➔ Use only approved hydraulic oil, see page 201.

- Check the hydraulic oil level with the dipstick and top up as required.
- Screw the lid back on (15 Nm).
- Insert the dipstick back in fully.

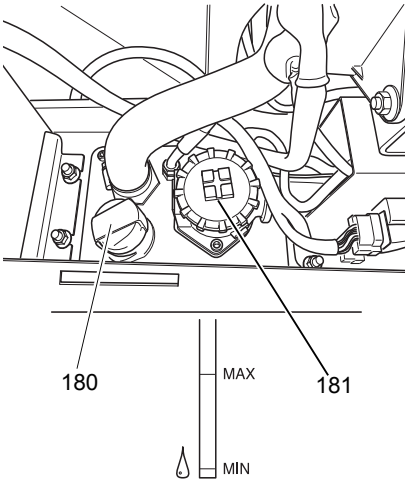

4.9.3 Replacing the hydraulic oil filter

Procedure

- Unscrew the lid (181).
- Remove the hydraulic oil filter in the lid.
- Insert a new hydraulic oil filter and screw the lid back on (15 Nm).

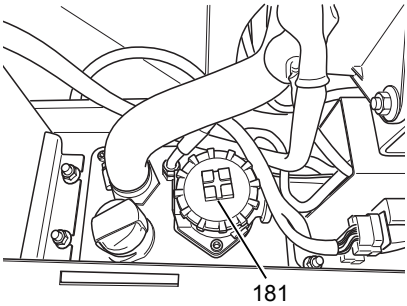

➔ Collect any spilled hydraulic oil. Dispose of the hydraulic oil and hydraulic oil filter and fuel in accordance with environmental regulations.

4.9.4 Replacing the ventilation/discharge filter

Procedure

- Pull off the filter (180).
- Install the new filter.

➔ Replace the breather filter if contaminated.

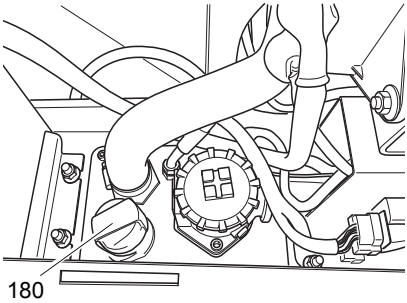

➔ Collect any spilled hydraulic oil. Dispose of the hydraulic oil and hydraulic oil filter and fuel in accordance with environmental regulations.

4.10 Cooling system

⚠ CAUTION!

Hot coolant can cause injury

The coolant is heated by the running engine and pressurised. When opening the filler cap under pressure, hot gas and hot fluid can escape from the expansion tank and cause scalding.

▶ Do not open the filler cap when pressurised.

▶ Allow the engine and coolant to cool sufficiently before opening the filler cap.

NOTE

Malfunction due to lack of coolant

The coolant must be between the MIN and MAX marks on the expansion tank. If the coolant is below the MIN mark, this indicates a possible leak in the cooling system.

▶ Check the coolant level in respect of the marks on the expansion tank.

▶ If the coolant is below the MIN mark, further operation of the truck is prohibited. Do not operate the truck until the cause has been rectified.

Checking the coolant level

Procedure

- Park the truck securely on a level surface.
- Check the coolant level on the expansion vessel (182).

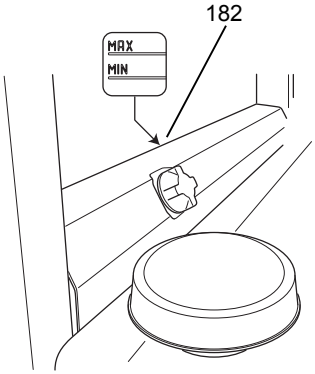

NOTE

The incorrect coolant can cause malfunctions

▶ To prevent the build up of lime as well as front and corrosion damage in the radiator system, and to raise the boiling point temperature of the coolant, the cooling circuit must be filled each year with a mixture of water and anti-freeze with anti-corrosion additives.

▶ Coolant can only be checked and added by experts.

Check the coolant concentrate

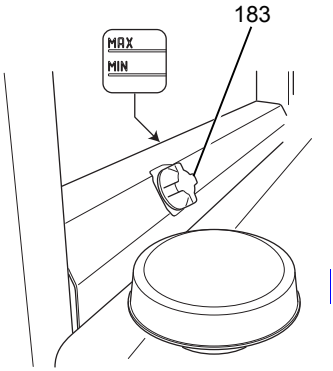

Tools and Material Required

– Anti-freeze tester for coolants

Procedure

- Slowly unscrew the filler cap (183) from the expansion tank.
- Check the anti-freeze content of the coolant with an anti-freeze tester.

NOTE

Incorrect coolant concentration can cause malfunctions

▶ If the coolant contains too little anti-freeze, restore the correct mixture ratio, see page 201.

- Screw the filler cap (183) back on.

The coolant concentration has now been checked.

4.11 Engine maintenance

⚠ WARNING!

Rotating and hot components can cause trapping and burning hazards when the engine is running.

When the cover is open, rotating and hot components are freely accessible and can cause injury if touched.

▶ Before starting work, make sure that the battery isolator can be reached to switch off the engine.

▶ Do not touch moving parts (e.g. fans, belt drives etc.) or hot surfaces.

▶ Truck maintenance and repair work must only be carried out by specially trained personnel who have been authorised by the owner.

4.11.1 Starting the engine with the cover open

The engine can only be started with the cover open in exceptional circumstances (e.g. jump starting).

Procedure

- Install the battery isolator (93) and switch on the truck.
- Switch on the ignition.
- Start the engine, see page 100.

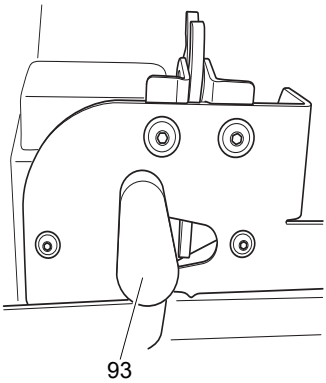

4.11.2 Check V-belt for damage

NOTE

A damaged V-belt will result in malfunctions.

▶ If the V-belt is not in a suitable condition, you must only start to use the truck when the damage has been rectified.

Procedure

- Check the V-belt for cracks, deformation and wear.

4.11.3 Checking the V belt tension

Procedure

- Insert the V belt between the fan V belt pulley and the generator V belt pulley using a force of 100 N.

It should be possible to insert the V belt approx. 8 mm.

4.11.4 Adjusting the V belt tension

Procedure

- Undo the screws (184) and pull the AC generator until you reach the prescribed V belt tension.
- Re-tighten the screws.
- Check the V belt tension again and repeat the adjustment if necessary.

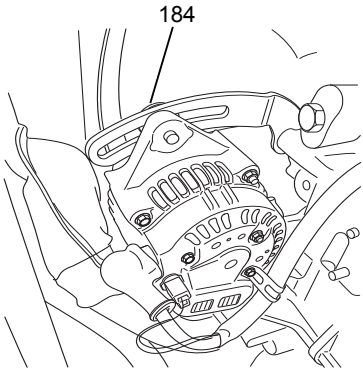

4.11.5 Changing the air filter

⚠ DANGER!

A running motor can be dangerous

▶ Carry out all maintenance work with the motor switched off.

▶ Do not start the motor if the air filter has been removed.

Changing the air filter

Procedure

- Undo the 3 mounting clamps (185) and remove the dust collector pot.
- Carefully remove the air filter from the filter housing.

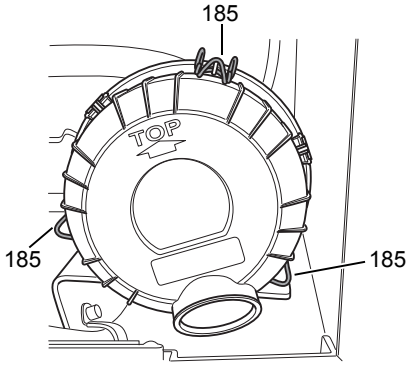

Cleaning the filter housing

Procedure

NOTE

A faulty engine can cause malfunctions

▶ Do not clean the air filter housing with compressed air.

▶ Always use a clean cloth to clean the air filter housing.

- Remove the air filter.
- Thoroughly clean the dust collector pot; to do this remove the dust extraction valve.
- Carefully clean the air filter housing with a clean cloth.
  ➔ There must be no residue from the cloth in the air filter housing.
- Replace the air filter in the filter housing.
  ➔ Take care not to damage the air filter when replacing it.
- Fit the dust discharge valve back into the dust collector pot.
- Insert the dust collector pot and secure it with the 3 mounting clamps (185).

4.11.6 DFG engine maintenance

NOTE

Used oil contaminates the environment

▶ Dispose of used oil and used engine oil filters in accordance with environmental regulations.

⚠ CAUTION!

Hot oil can burn.

▶ Wear appropriate safety gloves when replacing the oil and oil filter.

NOTE

When the engine is cold, the engine oil can be viscous.

▶ Only change the engine oil when the engine is at operating temperature and the industrial truck is horizontal. Always replace the engine oil and engine oil filter together.

Checking the engine oil level

Requirements

– Park the truck securely on a level surface, see page 103.

Procedure

- Remove the dipstick (186).
- Wipe the dipstick with a lint-free cloth and put in back fully into the opening.
- Remove the dipstick again and check that the oil level is between the MIN and MAX markings.
- If the engine oil level is below the bottom MIN marking, add more oil (see page 201).

The engine oil level has now been checked.

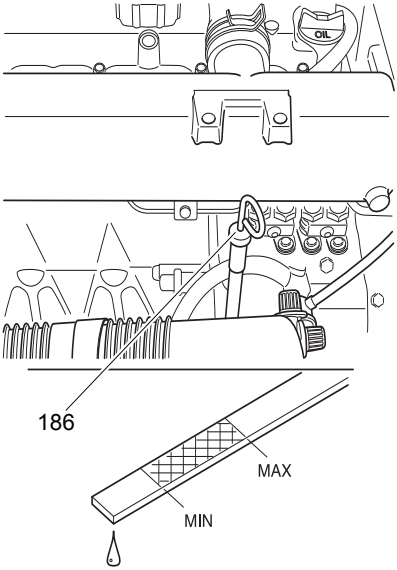

Draining the engine oil

Procedure

- Remove the floor plate.
- Unscrew the filler cap (189).
- Thoroughly clean the oil drain plug (187) and around the drain hole.
- Unscrew the oil drain plug.
- Collect any oil that emerges.
- Screw in the oil drain plug with a new seal.

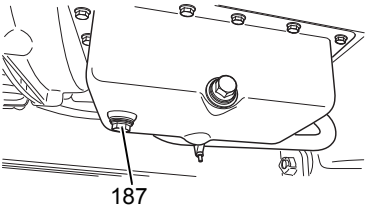

Replacing the engine oil filter

Procedure

- Undo the oil filter (188) with a filter wrench and manually unscrew it.

➔ Collect any emerging oil and dispose of the oil and oil filter in accordance with environmental regulations.

- Thoroughly clean the sealing faces of the oil filter flange.
- Apply a thin layer of fresh engine oil to the seal of the new oil filter.
- Hand-tighten the oil filter.

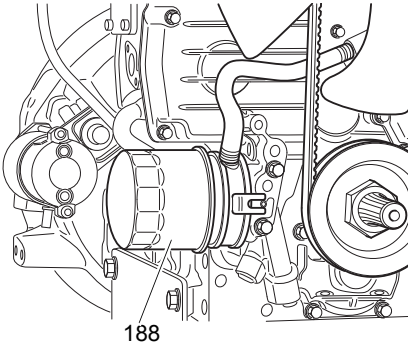

Adding engine oil

Procedure

- Add fresh engine oil (see page 201) through the filler port (189).
- Check the engine oil level with the dipstick (186) and top up if necessary.
- Screw the filler cap back on.
- Attach the floor plate.

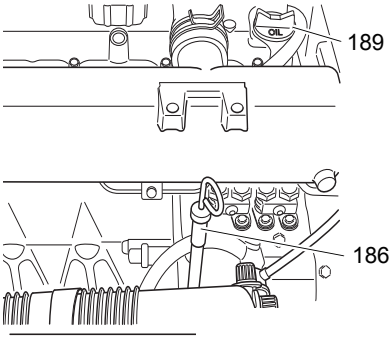

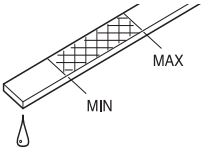

NOTE

The incorrect amount of oil will damage the engine.

▶ After replacing the oil and oil filter carry out a test run and check the oil pressure display (97).

▶ Check that the oil drain plug and oil filter housing are tight.

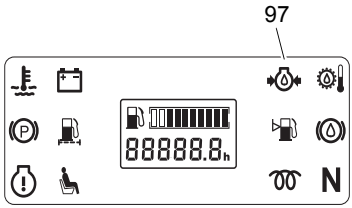

4.11.7 Replacing the fuel filter

NOTE

Fuel can cause environmental damage

▶ Bind any spilled diesel fuel with suitable absorbing agents.

▶ Dispose of the absorbed diesel fuel and the fuel filter in accordance with the relevant environmental protection laws.

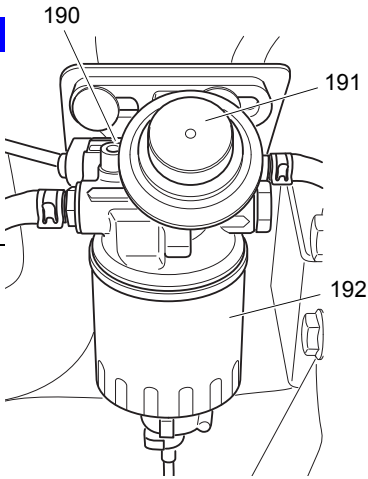

Procedure

- Drain the fuel from the filter into a suitable container.
- Undo the fuel filter (192) with a filter wrench and manually unscrew it.
- Thoroughly clean the raised faces of the filter flange.
- Apply a thin layer of diesel to the seal of the new fuel filter.
- Manually screw in the fuel filter until the seal contacts the filter flange.
- Tighten the fuel filter another third of a turn.
- Bleed the fuel system

4.11.8 Bleeding the fuel system

➔ Collect any emerging fuel and dispose of it in accordance with environmental regulations.

➔ Check the tightness of the fuel system when the engine is running.

Procedure

- Open the bleed screw (190).
- Apply the manual pump lever (191) on the fuel pump until fuel escapes from the bleed screw without bubbles.
- Tighten the bleed screw (190).
- Start the engine.

➔ If the engine does not start up or stops after a short time, repeat the bleeding procedure.

4.11.9 Emptying the fuel/water separator

Procedure

- Drain the fuel/water mixture from the fuel/water separator (192) into a suitable container.
- Bleed the fuel system.

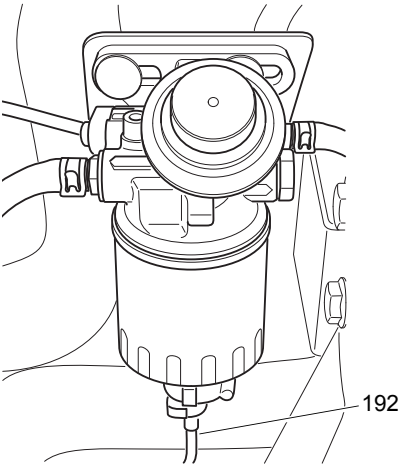

4.11.10 TFG engine maintenance

NOTE

Used oil contaminates the environment

▶ Dispose of used oil and used engine oil filters in accordance with environmental regulations.

⚠ **CAUTION!**

Hot oil can burn.

▶ Wear appropriate safety gloves when replacing the oil and oil filter.

NOTE

When the engine is cold, the engine oil can be viscous.

▶ Only change the engine oil when the engine is at operating temperature and the industrial truck is horizontal. Always replace the engine oil and engine oil filter together.

Draining the engine oil

Procedure

- Remove the floor plate.
- Unscrew the filler cap (189).
- Thoroughly clean the oil drain plug (187) and around the drain hole.
- Unscrew the oil drain plug.
- Collect any oil that emerges.
- Screw in the oil drain plug with a new seal.

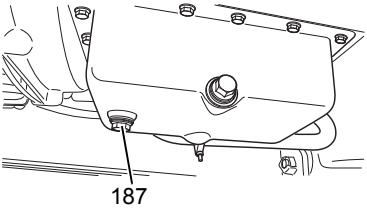

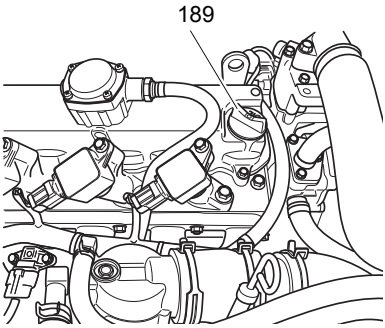

Checking the engine oil level

Requirements

– Park the truck securely on a level surface, see page 103.

Procedure

- Remove the dipstick (186).
- Wipe the dipstick with a lint-free cloth and put in back fully into the opening.
- Remove the dipstick again and check that the oil level is between the MIN and MAX markings.
- If the engine oil level is below the bottom MIN marking, add more oil (see page 201).

The engine oil level has now been checked.

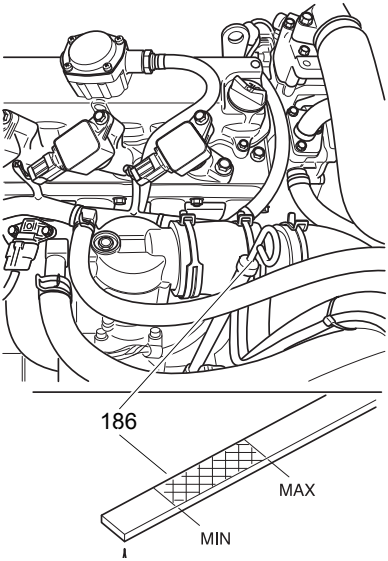

Adding engine oil

Procedure

- Add fresh engine oil (see page 201) through the filler port (189).
- Check the engine oil level with the dipstick (186) and top up if necessary.
- Screw the filler cap back on.
- Attach the floor plate.

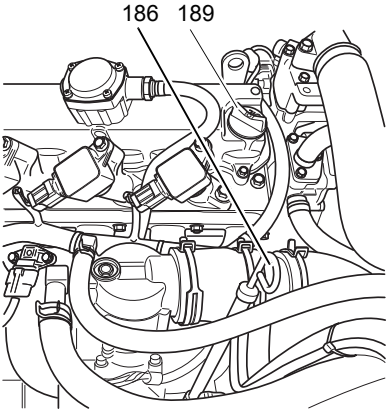

Replacing the engine oil filter

Procedure

- Undo the oil filter (188) with a filter wrench and manually unscrew it.
- Collect any emerging oil and dispose of the oil and oil filter in accordance with environmental regulations.
- Thoroughly clean the sealing faces of the oil filter flange.
- Apply a thin layer of fresh engine oil to the seal of the new oil filter.
- Hand-tighten the oil filter.

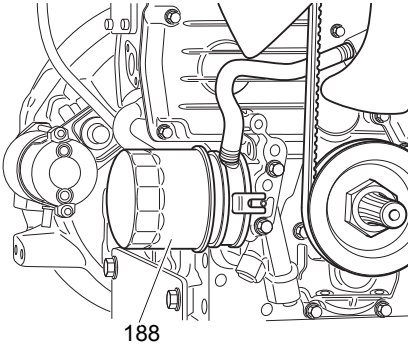

NOTE

The incorrect amount of oil will damage the engine.

▶ After replacing the oil and oil filter carry out a test run and check the oil pressure display (97).

▶ Check that the oil drain plug and oil filter housing are tight.

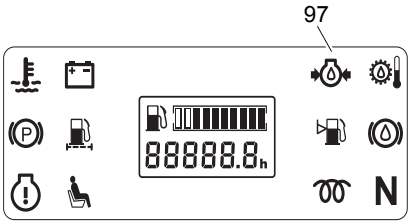

4.11.11 Replacing spark plugs

Procedure

- Pull off the ignition coil connector (193).
- Thoroughly clean the cylinder head around the spark plug.
- Remove the screw (195).
- Pull off the ignition coil (194).
- Unscrew the spark plug.
- Check the electrode distance of the new spark plugs with a feeler gauge.
  Target value: 0,7 mm - 0,8 mm.
- Screw in the spark plug by hand and then torque to 25 Nm.
- Fit the ignition coil.
- Replace the screw.
- Replace the ignition coil connector (193).

The spark plugs have been changed.

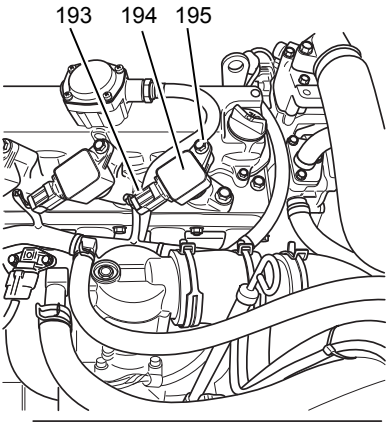

4.12 Checking electrical fuses

⚠ WARNING!

Electrical current can cause accidents

Make sure the electrical system is voltage-free before starting work on it. Before starting maintenance on the electrical system:

▶ Park the truck securely (see page 103).

▶ Disconnect the battery using the battery isolator.

▶ Remove any rings or metal bracelets etc. before working on electrical components.

⚠ CAUTION!

The use of incorrect fuses can cause fire and damage components

The use of incorrect fuses can damage the electrical system and result in fire. The safety and functionality of the truck cannot be ensured.

▶ Use only fuses with the prescribed rated current, see page 230.

Checking electrical fuses

Requirements

– Prepare the truck for maintenance and repairs (see page 203).

Procedure

- Check condition and rating of the fuses in accordance with the table.
- Replace any damaged fuses in accordance with the table.

The electrical fuses are now checked.

4.12.1 Fuse ratings

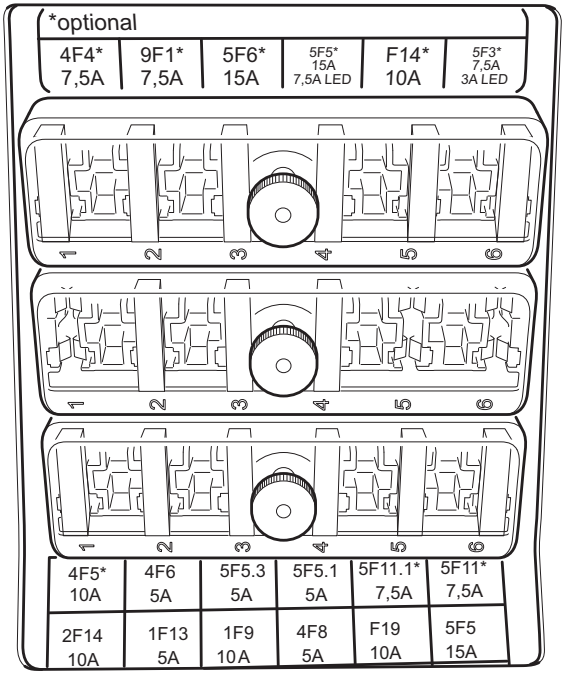

Fuse box on the control panel

Designation		Electric circuit	Rating (A)
4F5	○	Hazard warning system	10
4F6	●	Brake light	5
5F5.3	●	Lighting right	5
5F5.1	●	Lighting left	5
5F11.1	○	Front right-hand work light	7.5
5F11	○	Front left-hand work light	7.5
2F14	●	Valve control/horn	10
1F13	●	Travel/braking control fuse	5
1F9	●	Travel/lift electronics control fuse	10
4F8	●	Display control unit	5
F19	●	12-volt system	10
4F4	○	Beacon	7.5
9F1	○	Windscreen wiper	7.5
5F6	○	Cabin	15
5F5	○	Lighting	15 7.5 LED
F14	○	Heater	10

Fuse box on the control panel

Designation		Electric circuit	Rating (A)
5F3	○	Reversing lights	7.5 3 LED

●= Series equipment	○= Optional equipment

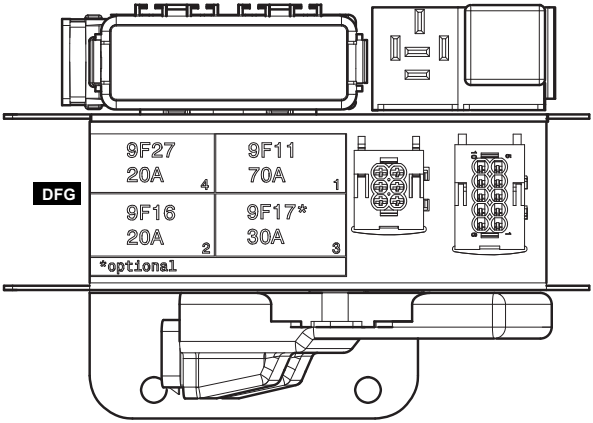

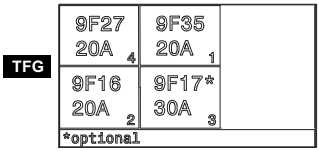

Fuse box on the engine (DFG)

Description		Electric circuit	Rating (A)
9F27	●	Terminal 30	20
9F11	●	Pre-heat	70
9F16	●	Key switch	20
9F17	○	Options	30

Fuse box on the engine (TFG)

Description		Electric circuit	Rating (A)
9F27	●	Terminal 30	20
9F35	●	Terminal 30 to the engine control unit	20
9F16	●	Key switch	20
9F17	○	Options	30

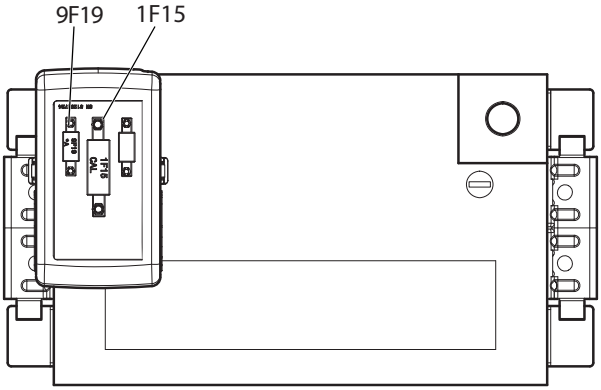

Fuse box on the battery

Description		Electric circuit
9F19	●	Alternator 80 A / 100 A
1F15	●	Starter CAL 3

●= Series equipment	○= Optional equipment

4.13 Cleaning

The truck may only be cleaned in the designated locations, which adhere to the stipulations of the country of use.

⚠ CAUTION!

Fire hazard

The truck must not be cleaned with flammable fluids.
If flammable materials are not removed from the engine compartment, they can come into contact with hot components and cause a fire.

▶ Carry out all necessary safety measures to prevent sparking before cleaning (e.g. by short-circuiting).

▶ Remove all deposits / accumulations of flammable materials from the engine compartment.

⚠ CAUTION!

Risk of component damage when cleaning the truck

Cleaning with a pressure washer can result in malfunctions due to humidity.

▶ Cover all electronic system assemblies (controllers, sensors, motors etc.) before cleaning the truck with a pressure washer.

▶ Do not hold the jet of the pressure washer by the marked points to avoid damaging them (see page 36).

▶ Do not clean the truck with pressurised water.

Cleaning the truck

Requirements

– Prepare the truck for maintenance and repairs (see page 203).

Tools and Material Required

– Water-based solvents
– Sponge or cloth

Procedure

- Clean the surface of the truck with water-based solvents and water. Use a sponge or cloth to clean.
- In particular, clean the following areas:
  - Windows
  - All walk-on areas
  - Oil filler ports and their surroundings
  - Grease nipples (before lubrication)
- Dry the truck after cleaning, e.g. with compressed air or a dry cloth.
- Carry out all the tasks in the section "Recommissioning the truck after cleaning or maintenance work" (see page 238).

The truck is now clean.

⚠ **CAUTION!**

Risk of electrical system damage

Cleaning the assemblies (controllers, sensors, motors etc.) of the electronic system with water can damage the electrical system.

▶ Do not clean the electrical system with water.

▶ Clean the electrical system with weak suction or compressed air (use a compressor with a water trap) and not a conductive, anti-static brush.

Cleaning the electrical system assemblies

Requirements

– Prepare the truck for maintenance and repairs (see page 203).

Tools and Material Required

– Compressor with water separator

– Non-conductive, antistatic brush

Procedure

- Expose the electrical system, see page 205.
- Clean the electrical system assemblies with weak suction or compressed air (use a compressor with a water trap) and not a conductive, anti-static brush.
- Fit the electrical system panel, see page 205.
- Carry out all the tasks in the section "Recommissioning the truck after cleaning or maintenance work" (see page 240).

The electrical system assemblies are now clean.

4.14 Starter battery

Checking the battery condition, the acid level and acid density

⚠ WARNING!

Batteries can be hazardous

Batteries contain an acid solution which is poisonous and corrosive. Avoid contact with battery acid at all times.

▶ Dispose of used battery acid in accordance with regulations.

▶ Always wear protective clothing and goggles when working with batteries.

▶ Do not let battery acid come into contact with skin, clothing or eyes. If necessary, rinse with plenty of clean water.

▶ In the event of physical damage (e.g. skin or eye contact with battery acid) call for a doctor immediately.

▶ Spilled battery acid should be neutralised immediately with plenty of water.

▶ Only batteries with a sealed battery container may be used.

▶ Follow national guidelines and legislation.

Check battery

Procedure

- Check the battery housing for cracks and any spilled acid.
- Remove any oxidisation remains from the battery terminals.
- Lubricate the battery terminals with an acid-free grease.

Checking the acid level and acid density

41

Procedure

- Clean the area around the plugs.
- Unscrew the plugs.

➔ The acid should lie between the top and bottom markings.

- If necessary, add distilled water up to the top marking.
- Check the acid density with an acid siphon.

➔ If the battery is charged sufficiently, the acid density should be 1.24 to 1.28 kg/l.

- Screw the plugs back on.
- Recharge the battery as required.
- Check that the warning symbols (41) are present on the battery.

Battery disposal

Batteries may only be disposed of in accordance with national environmental protection regulations or disposal laws. The manufacturer's disposal instructions must be observed.

4.15 Exhaust system

NOTE

Check emissions at regular intervals

▶ Check the combustion engine exhaust emissions at regular intervals in accordance with national regulations.

▶ Black or blue exhaust smoke is an indicator of high emission levels resulting from combustion engine damage or wear.

▶ In this case the truck must be examined by specialist personnel.

Check the exhaust system regularly for leaks.

Procedure

- Open the engine cover, see page 205.
- Start the engine when the engine cover is open. see page 219
- Check for any rising smell of exhaust and changed engine noise level.

➔ If you detect greater levels of exhaust smoke or a change in volume of the engine, the truck must be checked by qualified personnel.

4.16 Transmission and Drive Axle

4.16.1 Checking the transmission and drive axle oil levels

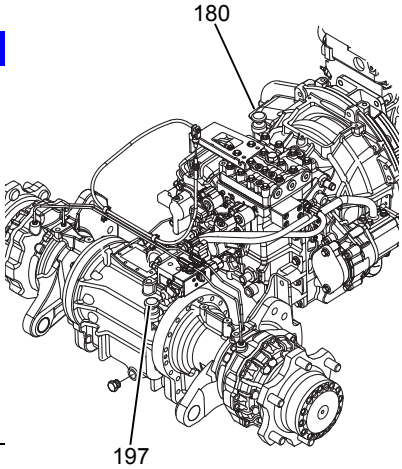

NOTE

An incorrect oil level can damage the transmission and drive axle

The oil circuits of the drive axle and transmission are interlinked and impact on each other. If oil is added to the transmission, the oil level on the drive axle will also rise. The oil acts as a lubricant and coolant and also serves to transfer force. A low oil level results in a loss of drive power and causes transmission damage due to overheating.

▶ Always measure the oil level on both the transmission and drive axle.

➔ Only use clean, fresh oil from clean containers to fill or top up the transmission. Damage will arise from contamination or water entering the transmission.

➔ The transmission oil dipstick is on the right-hand side of the transmission (looking in the direction of travel).

➔ Always check the transmission oil level at operational temperature.

Procedure

- Park the truck securely on a level surface.
- Switch on the engine and run it for one minute.
- While the engine is running in idle, remove the dipstick (197).
- Wipe the dipstick with a lint-free cloth and put in back fully into its port.
- Remove the dipstick again and check whether the oil level is between the MIN and MAX markings.
- If the level is below the centre point, add transmission oil through the filler port (197) until it reaches the MAX marking on the dipstick.
- Refit the dipstick in the port.
- Increase the engine speed slightly and wait for one minute to allow the oil to be distributed throughout the transmission and drive axle.
- While the engine is running in idle, remove the dipstick (180).
- Wipe the dipstick with a lint-free cloth and put in back fully into its port.
- Remove the dipstick again and check whether the oil level is between the MIN and MAX markings.

  The transmission oil level has now been checked.

4.17 Brake

4.17.1 Check the brake oil level

⚠ WARNING!

Malfunctioning brake due to incorrect consumable

Using brake fluid can cause the brake to fail.

▶ Only use authorised brake oil according to the consumables table, see page 201.

Procedure

- Remove the covers (198).
- Check the brake oil level in the brake oil reservoir (199) .
- The brake oil level should lie between the MIN and MAX markings.
- If necessary, add brake oil.
  Capacity: 0.25 L
- After adding brake oil, refit the cover.

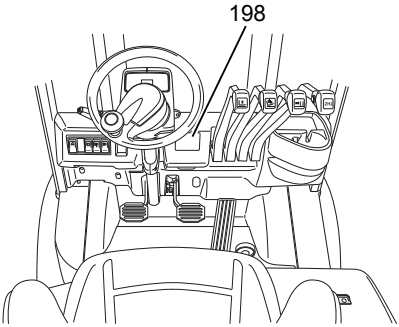

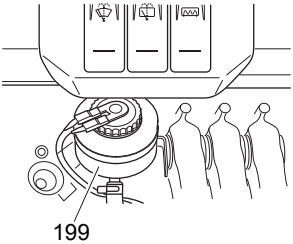

4.18 Restoring the truck to service after maintenance and repairs

Procedure

- Commission the truck, see page 79.

5 Decommissioning the Industrial Truck

If the truck is to be out of service for more than a month, it must be stored in a frost-free and dry room. All necessary measures must be taken before, during and after decommissioning as described hereafter.

When the truck is out of service it must be jacked up so that all the wheels are clear of the ground. This is the only way of ensuring that the wheels and wheel bearings are not damaged.

➔ Jack up the truck, see page 204.

If the truck is to be out of service for more than 6 months, agree further measures with the manufacturer's customer service department.

5.1 Prior to decommissioning

Procedure

- Thoroughly clean the truck, see page 233.
- Prevent the truck from rolling away.
- Check the hydraulic oil level and replenish if necessary, see page 215.
- Apply a thin layer of oil or grease to any non-painted mechanical components.
- Lubricate the truck according to the lubrication schedule, see page 200.
- Disconnect the battery, clean it and grease the terminals.

➔ In addition, follow the battery manufacturer's instructions.

5.2 During decommissioning

NOTE

Full discharge can damage the battery

Self-discharge can cause the battery to fully discharge. Full discharge shortens the useful life of the battery.

▶ Charge the battery at least every 2 months.

5.3 Restoring the truck to service after decommissioning

Procedure

- Thoroughly clean the truck, see page 233.
- Lubricate the truck according to the lubrication schedule, see page 200.
- Clean the battery, grease the terminals and connect the battery.
- Charge the battery, see page 235.
- Commission the truck, see page 79.

6 Safety tests to be performed at intervals and after unusual incidents

The truck must be inspected at least annually (refer to national regulations) or after any unusual event by a qualified inspector. The manufacturer offers a safety inspection service which is performed by personnel specifically trained for this purpose.

A complete test must be carried out on the technical condition of the truck with regard to safety. The truck must also be examined thoroughly for damage.

The operating company is responsible for ensuring that faults are rectified immediately.

7 Final de-commissioning, disposal

➔ Final de-commissioning or disposal of the truck in must be performed in accordance with the regulations of the country of use. In particular, regulations governing the disposal of batteries, consumables and electronic and electrical systems must be observed.

The truck must only be disassembled by trained personnel in accordance with the procedures as specified by the manufacturer.

8 Human vibration measurement

➔ Vibrations that affect the operator over the course of the day are known as human vibrations. Excessive human vibrations will cause the operator long term health problems. The European "2002/44/EC/Vibration" operator directive has therefore been established to protect operators. To help operators to assess the application situation, the manufacturer offers a service of measuring these human vibrations.

G Maintenance, Inspection and Changing of Maintenance Parts Requiring Replacement

⚠ WARNING!

Lack of maintenance can result in accidents

Failure to perform regular maintenance and inspections can lead to truck failure and poses a potential hazard to personnel and equipment.

▶ Thorough and expert maintenance and inspections are among the most important requirements for the safe operation of the industrial truck.

NOTE

The application conditions of an industrial truck have a considerable impact on component wear. The following service, inspection and replacement intervals are based on single-shift operation under normal operating conditions. The intervals must be reduced accordingly if more stringent requirements are placed on the equipment, e.g., use in conditions of extreme dust, temperature fluctuations or multiple shifts.

▶ To prevent damage due to wear, the manufacturer recommends an on-site application analysis to agree on appropriate intervals.

The following chapter defines the tasks to be performed, the respective intervals to be observed and the maintenance parts for which replacement is recommended.

During the truck run-in period, after approx. 100 service hours, the operating company must check the wheel nuts/bolts and re-tighten if necessary.

1 Maintenance Contents DFG 316-435

Issued on: 26.04.2018 15:36:29

1.1 Owner

To be performed every 50 service hours, but at least once a week.

1.1.1 Maintenance contents

1.1.1.1 Standard equipment

Brakes
Test the function of the brakes
Correct the brake oil level.

Power supply
Correct the battery acid level using demineralised water.

Driving
Correct the coolant level.
Clean the outside of the radiator.
Correct the tyre pressure.
Clean the air filter.
Correct the engine oil level.

Chassis and superstructure
Clean the engine compartment.

Hydr. movements
Lubricate the load chains.
Correct the hydraulic oil level.

Steering
Grease the steering axle.

1.1.1.2 Optional equipment

Fork adjuster

Hydr. movements
Clean and lubricate the attachment.

Clamping device

Hydr. movements
Clean and lubricate the attachment.

Sideshifter

Hydr. movements
Clean and lubricate the attachment.

Telescopic forks

Hydr. movements
Clean and lubricate the attachment.

Wiper/washer system

Chassis and superstructure
Correct the fill level of the windscreen washer reservoir.

Heating coolant water

Chassis and superstructure
Clean the heater breather filter.

1.1.2 Inspection contents

1.1.2.1 Standard equipment

The following points must be checked:

Electrics
Warning and safety devices are in accordance with the operating instructions
Function of display and controls
The function of the bonnet switch and for damage
The function of the main switch/battery isolator and for damage

Power supply
Battery and battery components for damage
Battery cable connections are secure
The presence of battery safety labels and for damage

Driving
The radiator for damage
Wheels for wear and damage

Chassis and superstructure
Doors and/or covers for damage
Labels are legible, complete and plausible
The secure seating of the overhead guard and/or the cab for damage
The function of the driver's seat restraint system and for damage

Hydr. movements
The function of the hydraulic system
The forks or load handler for wear and damage

1.1.2.2 Optional equipment

The following points must be checked:

Wiper/washer system

Chassis and superstructure
The windscreen washer reservoir for leaks and damage

Road traffic approval

Electrics
The function of the lighting and for damage

Work lights

Electrics
The function of the lighting and for damage

Weather proofing

Chassis and superstructure
The function of the doors and for damage

Optional equipment

Chassis and superstructure
The function of optional equipment such as mirrors, storage compartments, grips, windscreen wipers and washing systems, etc. and for damage

Strobe light / beacon

Electrics
Strobe light/warning beacon for function and damage

Heating coolant water

Chassis and superstructure
The function of the heater

1.2 Customer Service

1.2.1 Maintenance contents

In accordance with the DFG 316-435 service interval, to be performed every 500 service hours, but at least once a year.

1.2.1.1 Standard equipment

Brakes
Test the function of the brakes
Adjust and lubricate the brake mechanism.
Correct the brake oil level.

Electrics
Adjust the microswitches.
Test the contactors and/or relays.

Power supply
Clean and grease the battery terminals.
Correct the battery acid level using demineralised water.
Measure the battery voltage.

Driving
Correct the amount of anti-freeze in the coolant.
Correct the coolant level.
Clean the outside of the radiator.
Correct the tyre pressure.
Adjust maximum engine speed without load.
Clean the air filter.
Correct the engine oil level.
Set the valve clearance.
Test the glow plugs.
Empty the fuel/water separator.
Note: If diesel fuel with a high sulphur content (0.50% (5,000 ppm) to 1.0 % (10,000 ppm)) is used, the engine oil and oil filter change interval is reduced to 250 operating hours. Do not use diesel fuel with a sulphur content above 1.0% (10,000 ppm)!
Note: If heavily contaminated fuels are used, it may be necessary to reduce the fuel filter change interval from 1,000 to 500 operating hours.

Driving
Clean the oil suction strainer of the axle.
Clean the transmission breather.
Clean the transmission oil suction strainer.
Correct the drive axle and transmission oil levels.
Measure the coupling pressure on the transmission.

Chassis and superstructure
Clean the engine compartment.

Hydr. movements
Adjust the slide pieces.
Adjust the load chains.
Lubricate the load chains.
Lubricate the running surfaces of the mast.
Test emergency lowering.
Correct the hydraulic oil level.
Test and adjust the pressure relief valve.
Where two tilt cylinders with the same stroke are used, measure their relative adjustment.
Measure the lift and lowering speeds and ensure that they are correct.

Agreed performance
Carry out a test run with the rated load or a customer-specific load.
Demonstration after maintenance.
Lubricate truck according to the lubrication diagram.

Steering
Adjust the steering knuckle bearing.
Grease the steering axle.

1.2.1.2 Optional equipment

Fork adjuster

Hydr. movements
Adjust the attachment.
Clean and grease attachment bearings, guides and stops.
Clean and lubricate the attachment.
The axial play of the front and rear rollers.

Clamping device

Hydr. movements
Clean and grease attachment bearings, guides and stops.
Clean and lubricate the attachment.
The axial play of the front and rear rollers.

Sideshifter

Hydr. movements
Clean and grease attachment bearings, guides and stops.
Clean and lubricate the attachment.
The axial play of the front and rear rollers.
Test the side shift adjustment.

Telescopic forks

Hydr. movements
Clean and grease attachment bearings, guides and stops.
Clean and lubricate the attachment.

Wiper/washer system

Chassis and superstructure
Correct the fill level of the windscreen washer reservoir.

Video system

System components
Clean the camera.
Clean the display.

Weigher sensors / switches

Electrics
Test the weighing system.

Multifunction armrest

System components
Test function and settings.

1.2.2 Inspection contents

The following points must be checked:

1.2.2.1 Standard equipment

Brakes
Brake mechanism for function and damage
Connections and lines for leaks and damage

Electrics
Warning and safety devices are in accordance with the operating instructions
Function of display and controls
Microswitches for function and damage
The function of the bonnet switch and for damage
The function of the main switch/battery isolator and for damage
The electric wiring for damage (insulation damage, connections) and the fuse ratings

Power supply
The fuel system, tank and lines for leaks and damage
Battery and battery components for damage
Battery cable connections are secure
The presence of battery safety labels and for damage

Driving
Exhaust system for function, leaks and damage
Cooling system for leaks and damage
The radiator for damage
Transmission for noise and leaks
The Cardan shaft for wear and damage
Wheel bearings and attachment for wear and damage
Wheels for wear, damage and secure mounting
The function and secure seating of the starter motor and alternator and for damage
The V-belts/multi-V belts for wear and correct tension
The engine for noise and leaks
Engine is secure and for damage
The function of the water pump and for damage
The secure seating of the electrical connections of the glow plug system and for damage
The fuel/water separator for damage
The drive axle for noise and leaks
Oil suction strainer for damage
Oil suction strainer of the axle for damage
Transmission oil filter for damage

Chassis and superstructure
Doors and/or covers for damage
The secure seating of the chassis and screw connections and for damage
Labels are legible, complete and plausible
Driver's seat for damage
The secure seating of the driver's seat and the function of the adjustment mechanism
The counterweight is securely attached
The mast bearings for wear
The secure seating of the mast
The function of the trailer coupling or tow mechanism and for damage
Operator mat and steps are non-slip and free of damage
The secure seating of the overhead guard and/or the cab for damage
The function of the driver's seat restraint system and for damage

Hydr. movements
The function of the "hydraulic system" controls and for legibility, completeness and plausibility
The secure seating of the cylinders and piston rods and for leaks and damage
Slides and stops for wear and damage
Load chain mounting elements and chain pins for wear and damage
Lateral play of the mast sections and fork carriage
Mast rollers and their running surfaces for wear and damage
Running surfaces of the mast for wear and damage
The function of the hydraulic system
The forks or load handler for wear and damage
The secure seating of the hoses, pipes and connections and for wear, leaks, damage, blisters and kinks
Piston rod screw depth and counter-fixing/clamping
Tilt cylinders and mounting for leaks, wear and damage

Steering
The function of the hydraulic steering and its components and for damage
Steering hoses and pipe lines for leaks and damage
The steering axle and steering knuckle for wear and damage
Steering knuckle bearing for wear and damage
The mechanical parts of the steering column for wear and damage

1.2.2.2 Optional equipment

Load backrest

Hydr. movements
Proper securing of the attachment to the truck and the load-bearing components for secure fit and damage

Boom

Hydr. movements
Proper securing of the attachment to the truck and the load-bearing components for secure fit and damage

Fork adjuster

Hydr. movements
Attachment bearings, guides and stops for wear and damage
Proper securing of the attachment to the truck and the load-bearing components for secure fit and damage
Sliding blocks are complete and for wear and damage
The function of the attachment and for damage
The secure seating of the hydraulic connections and for leaks
Cylinder rods and their bushings for wear and damage
Cylinder seals for leaks and damage

Clamping device

Hydr. movements
The function of the acknowledgement button
Attachment bearings, guides and stops for wear and damage
Proper securing of the attachment to the truck and the load-bearing components for secure fit and damage
Sliding blocks are complete and for wear and damage
The function of the attachment and for damage
The secure seating of the hydraulic connections and for leaks
Cylinder rods and their bushings for wear and damage
Cylinder seals for leaks and damage

Sideshifter

Hydr. movements
Attachment bearings, guides and stops for wear and damage
Proper securing of the attachment to the truck and the load-bearing components for secure fit and damage
Sliding blocks are complete and for wear and damage
The function of the attachment and for damage
The secure seating of the hydraulic connections and for leaks
Cylinder rods and their bushings for wear and damage
Cylinder seals for leaks and damage

Telescopic forks

Hydr. movements
Attachment bearings, guides and stops for wear and damage
Proper securing of the attachment to the truck and the load-bearing components for secure fit and damage
The function of the attachment and for damage
The secure seating of the hydraulic connections and for leaks
Cylinder seals for leaks and damage
The pistons and piston rods for wear and damage

Crane hook

Hydr. movements
Proper securing of the attachment to the truck and the load-bearing components for secure fit and damage

Working platform

Hydr. movements
Proper securing of the attachment to the truck and the load-bearing components for secure fit and damage

Wiper/washer system

Chassis and superstructure
The windscreen washer reservoir for leaks and damage
The function of the windscreen wipers and for damage

Trailer coupling

Chassis and superstructure
The function of the trailer coupling or tow mechanism and for damage

Seat heating

Electrics
Connections and cables are secure and for insulation damage and other damage

Shock sensor / data recorder

Electrics
The shock sensor/data recorder is secure and for damage

Road traffic approval

Electrics
The function of the lighting and for damage

Video system

System components
The secure seating of the cables and for damage
The function and secure seating of the camera and for damage
The function and secure seating of the monitor and for damage

Work lights

Electrics
The function of the lighting and for damage

Fire extinguisher

Agreed performance
The fire extinguisher is present and secure and check the inspection interval

Weigher sensors / switches

Electrics
The weighing system for damage

Access module

Electrics
Access module is secure and functions correctly and for damage

Weather proofing

Chassis and superstructure
The function of the windscreen heating and for damage
The function of the doors and for damage

Electrical optional equipment

Electrics
The function of the optional electrical equipment and for damage

Optional equipment

Chassis and superstructure
The function of optional equipment such as mirrors, storage compartments, grips, windscreen wipers and washing systems, etc. and for damage

Strobe light / beacon

Electrics
Strobe light/warning beacon for function and damage

Overhead guard cover

Chassis and superstructure
Overhead guard cover is present and secure, and for damage

Audible warning devices

Electrics
Buzzer/warning alarm is secure and functions correctly and for damage

Belt lock control

Chassis and superstructure
The function of the seat belt monitoring and for damage

Discharge strap

Electrics
Electrostatic discharge strap or chain is present and for damage

Restraint system / SUN protector

Chassis and superstructure
Restraint system is complete and functions correctly and for damage

Heating coolant water

Chassis and superstructure
The function of the heater
The secure seating of the hoses and for leaks and damage

Multifunction armrest

Hydr. movements
The function of the "hydraulic system" controls and for legibility, completeness and plausibility

1.2.3 Maintenance parts

The manufacturer recommends the replacement of the following maintenance parts at the specified intervals.

1.2.3.1 Standard equipment

maintenance part	service hours	months
The transmission oil filter	1000	12
The brake oil in the braking system	1000	12
Hydraulic oil	2000	12
Hydraulic oil filter	2000	12
Hydraulic oil suction filter	2000	12
The hydraulic reservoir breather cap	1000	12
The coolant and anti-freeze	2000	12
The engine oil filter	500	
The fuel filter	1000	12
The fuel prefilter	500	
The air filter	1000	12
The engine oil	500	
Engine oil drain screw seal	500	
Lower hose connector between transmission and axle	2000	12
Oil suction filter O ring, axle side	2000	12
Oil suction filter O ring, converter side	2000	12
Drive axle oil and transmission oil	2000	12

1.2.3.2 Optional equipment

Heating coolant water

maintenance part	service hours	months
Heater breather filter	1000	12

2 Maintenance Contents TFG 316-435

Issued on: 26.04.2018 14:16:19

2.1 Owner

To be performed every 50 service hours, but at least once a week.

2.1.1 Maintenance contents

2.1.1.1 Standard equipment

Brakes
Test the function of the brakes
Correct the brake oil level.

Power supply
Correct the battery acid level using demineralised water.

Driving
Correct the coolant level.
Clean the outside of the radiator.
Correct the tyre pressure.
Clean the air filter.
Correct the engine oil level.

Chassis and superstructure
Clean the engine compartment.

Hydr. movements
Lubricate the load chains.
Correct the hydraulic oil level.

Steering
Grease the steering axle.

2.1.1.2 Optional equipment

Fork adjuster

Hydr. movements
Clean and lubricate the attachment.

Clamping device

Hydr. movements
Clean and lubricate the attachment.

Sideshifter

Hydr. movements
Clean and lubricate the attachment.

Telescopic forks

Hydr. movements
Clean and lubricate the attachment.

Wiper/washer system

Chassis and superstructure
Correct the fill level of the windscreen washer reservoir.

Heating coolant water

Chassis and superstructure
Clean the heater breather filter.

2.1.2 Inspection contents

2.1.2.1 Standard equipment

The following points must be checked:

Electrics
Warning and safety devices are in accordance with the operating instructions
Function of display and controls
The function of the bonnet switch and for damage
The function of the main switch/battery isolator and for damage

Power supply
Battery and battery components for damage
Battery cable connections are secure
The presence of battery safety labels and for damage

Driving
The radiator for damage
Wheels for wear and damage

Chassis and superstructure
Doors and/or covers for damage
Labels are legible, complete and plausible
The secure seating of the overhead guard and/or the cab for damage
The function of the driver's seat restraint system and for damage

Hydr. movements
The function of the hydraulic system
The forks or load handler for wear and damage

2.1.2.2 Optional equipment

The following points must be checked:

Wiper/washer system

Chassis and superstructure
The windscreen washer reservoir for leaks and damage

Road traffic approval

Electrics
The function of the lighting and for damage

Work lights

Electrics
The function of the lighting and for damage

Weather proofing

Chassis and superstructure
The function of the doors and for damage

Optional equipment

Chassis and superstructure
The function of optional equipment such as mirrors, storage compartments, grips, windscreen wipers and washing systems, etc. and for damage

Strobe light / beacon

Electrics
Strobe light/warning beacon for function and damage

Heating coolant water

Chassis and superstructure
The function of the heater

2.2 Customer Service

2.2.1 Maintenance contents

In accordance with the TFG 316-435 service interval, to be performed every 500 service hours, but at least once a year.

2.2.1.1 Standard equipment

Brakes
Test the function of the brakes
Adjust and lubricate the brake mechanism.
Correct the brake oil level.

Electrics
Adjust the microswitches.
Test the contactors and/or relays.

Power supply
Adjust the fuel system.
Clean and grease the battery terminals.
Correct the battery acid level using demineralised water.
Measure the battery voltage.
Note: Check the exhaust levels every six months and adjust if necessary. Observe other national guidelines and regulations.
Clean the mixer.

Driving
Correct the amount of anti-freeze in the coolant.
Correct the coolant level.
Clean the outside of the radiator.
Correct the tyre pressure.
Adjust maximum engine speed without load.
Clean the air filter.
Correct the engine oil level.
Set the valve clearance.
The function of the engine fan check valve
Clean the oil suction strainer of the axle.
Clean the transmission breather.
Clean the transmission oil suction strainer.
Correct the drive axle and transmission oil levels.
Measure the coupling pressure on the transmission.

Chassis and superstructure
Clean the engine compartment.

Hydr. movements
Adjust the slide pieces.
Adjust the load chains.
Lubricate the load chains.
Lubricate the running surfaces of the mast.
Test emergency lowering.
Correct the hydraulic oil level.
Test and adjust the pressure relief valve.
Where two tilt cylinders with the same stroke are used, measure their relative adjustment.
Measure the lift and lowering speeds and ensure that they are correct.

Agreed performance
Carry out a test run with the rated load or a customer-specific load.
Demonstration after maintenance.
Lubricate truck according to the lubrication diagram.

Steering
Adjust the steering knuckle bearing.
Grease the steering axle.

2.2.1.2 Optional equipment

Fork adjuster

Hydr. movements
Adjust the attachment.
Clean and grease attachment bearings, guides and stops.
Clean and lubricate the attachment.
The axial play of the front and rear rollers.

Clamping device

Hydr. movements
Clean and grease attachment bearings, guides and stops.
Clean and lubricate the attachment.
The axial play of the front and rear rollers.

Sideshifter

Hydr. movements
Clean and grease attachment bearings, guides and stops.
Clean and lubricate the attachment.
The axial play of the front and rear rollers.
Test the side shift adjustment.

Telescopic forks

Hydr. movements
Clean and grease attachment bearings, guides and stops.
Clean and lubricate the attachment.

Wiper/washer system

Chassis and superstructure
Correct the fill level of the windscreen washer reservoir.

Video system

System components
Clean the camera.
Clean the display.

Weigher sensors / switches

Electrics
Test the weighing system.

Multifunction armrest

System components
Test function and settings.

2.2.2 Inspection contents

The following points must be checked:

2.2.2.1 Standard equipment

Brakes
Brake mechanism for function and damage
Connections and lines for leaks and damage

Electrics
Warning and safety devices are in accordance with the operating instructions
Function of display and controls
Microswitches for function and damage
The function of the bonnet switch and for damage
The function of the main switch/battery isolator and for damage
The electric wiring for damage (insulation damage, connections) and the fuse ratings

Power supply
Battery and battery components for damage
Battery cable connections are secure
The presence of battery safety labels and for damage
Note: The LPG system may only be inspected by LPG system experts.
The function of the LPG system and for leaks and damage
The secure seating of the fuel tank and for damage

Driving
Exhaust system for function, leaks and damage
Cooling system for leaks and damage
The radiator for damage
Transmission for noise and leaks
The Cardan shaft for wear and damage
Wheel bearings and attachment for wear and damage
Wheels for wear, damage and secure mounting
The function and secure seating of the starter motor and alternator and for damage
The V-belts/multi-V belts for wear and correct tension
The engine for noise and leaks
Engine is secure and for damage
The function of the water pump and for damage

Driving
The function of the ignition system and for damage
The drive axle for noise and leaks
Oil suction strainer for damage
Oil suction strainer of the axle for damage
Transmission oil filter for damage

Chassis and superstructure
Doors and/or covers for damage
The secure seating of the chassis and screw connections and for damage
Labels are legible, complete and plausible
Driver's seat for damage
The secure seating of the driver's seat and the function of the adjustment mechanism
The counterweight is securely attached
The mast bearings for wear
The secure seating of the mast
The function of the trailer coupling or tow mechanism and for damage
Operator mat and steps are non-slip and free of damage
The secure seating of the overhead guard and/or the cab for damage
The function of the driver's seat restraint system and for damage

Hydr. movements
The function of the "hydraulic system" controls and for legibility, completeness and plausibility
The secure seating of the cylinders and piston rods and for leaks and damage
Slides and stops for wear and damage
Load chain mounting elements and chain pins for wear and damage
Lateral play of the mast sections and fork carriage
Mast rollers and their running surfaces for wear and damage
Running surfaces of the mast for wear and damage
The function of the hydraulic system
The forks or load handler for wear and damage
The secure seating of the hoses, pipes and connections and for wear, leaks, damage, blisters and kinks
Piston rod screw depth and counter-fixing/clamping
Tilt cylinders and mounting for leaks, wear and damage

Steering
The function of the hydraulic steering and its components and for damage
Steering hoses and pipe lines for leaks and damage
The steering axle and steering knuckle for wear and damage
Steering knuckle bearing for wear and damage
The mechanical parts of the steering column for wear and damage

2.2.2.2 Optional equipment

Load backrest

Hydr. movements
Proper securing of the attachment to the truck and the load-bearing components for secure fit and damage

Boom

Hydr. movements
Proper securing of the attachment to the truck and the load-bearing components for secure fit and damage

Fork adjuster

Hydr. movements
Attachment bearings, guides and stops for wear and damage
Proper securing of the attachment to the truck and the load-bearing components for secure fit and damage
Sliding blocks are complete and for wear and damage
The function of the attachment and for damage
The secure seating of the hydraulic connections and for leaks
Cylinder rods and their bushings for wear and damage
Cylinder seals for leaks and damage

Clamping device

Hydr. movements
The function of the acknowledgement button
Attachment bearings, guides and stops for wear and damage
Proper securing of the attachment to the truck and the load-bearing components for secure fit and damage
Sliding blocks are complete and for wear and damage
The function of the attachment and for damage
The secure seating of the hydraulic connections and for leaks
Cylinder rods and their bushings for wear and damage
Cylinder seals for leaks and damage

Sideshifter

Hydr. movements
Attachment bearings, guides and stops for wear and damage
Proper securing of the attachment to the truck and the load-bearing components for secure fit and damage
Sliding blocks are complete and for wear and damage
The function of the attachment and for damage
The secure seating of the hydraulic connections and for leaks
Cylinder rods and their bushings for wear and damage
Cylinder seals for leaks and damage

Telescopic forks

Hydr. movements
Attachment bearings, guides and stops for wear and damage
Proper securing of the attachment to the truck and the load-bearing components for secure fit and damage
The function of the attachment and for damage
The secure seating of the hydraulic connections and for leaks
Cylinder seals for leaks and damage
The pistons and piston rods for wear and damage

Crane hook

Hydr. movements
Proper securing of the attachment to the truck and the load-bearing components for secure fit and damage

Working platform

Hydr. movements
Proper securing of the attachment to the truck and the load-bearing components for secure fit and damage

Wiper/washer system

Chassis and superstructure
The windscreen washer reservoir for leaks and damage
The function of the windscreen wipers and for damage

Trailer coupling

Chassis and superstructure
The function of the trailer coupling or tow mechanism and for damage

Seat heating

Electrics
Connections and cables are secure and for insulation damage and other damage

Shock sensor / data recorder

Electrics
The shock sensor/data recorder is secure and for damage

Road traffic approval

Electrics
The function of the lighting and for damage

Video system

System components
The secure seating of the cables and for damage
The function and secure seating of the camera and for damage
The function and secure seating of the monitor and for damage

Work lights

Electrics
The function of the lighting and for damage

Fire extinguisher

Agreed performance
The fire extinguisher is present and secure and check the inspection interval

Weigher sensors / switches

Electrics
The weighing system for damage

Access module

Electrics
Access module is secure and functions correctly and for damage

Weather proofing

Chassis and superstructure
The function of the windscreen heating and for damage
The function of the doors and for damage

Electrical optional equipment

Electrics
The function of the optional electrical equipment and for damage

Optional equipment

Chassis and superstructure
The function of optional equipment such as mirrors, storage compartments, grips, windscreen wipers and washing systems, etc. and for damage

Strobe light / beacon

Electrics
Strobe light/warning beacon for function and damage

Overhead guard cover

Chassis and superstructure
Overhead guard cover is present and secure, and for damage

Audible warning devices

Electrics
Buzzer/warning alarm is secure and functions correctly and for damage

Belt lock control

Chassis and superstructure
The function of the seat belt monitoring and for damage

Discharge strap

Electrics
Electrostatic discharge strap or chain is present and for damage

Restraint system / SUN protector

Chassis and superstructure
Restraint system is complete and functions correctly and for damage

Heating coolant water

Chassis and superstructure
The function of the heater
The secure seating of the hoses and for leaks and damage

Multifunction armrest

Hydr. movements
The function of the "hydraulic system" controls and for legibility, completeness and plausibility

2.2.3 Maintenance parts

The manufacturer recommends the replacement of the following maintenance parts at the specified intervals.

2.2.3.1 Standard equipment

maintenance part	service hours	months
The transmission oil filter	1000	12
The brake oil in the braking system	1000	12
Fuel shut-off valve repair kit	1000	12
Hydraulic oil	2000	12
Hydraulic oil filter	2000	12
Hydraulic oil suction filter	2000	12
The hydraulic reservoir breather cap	1000	12
The coolant and anti-freeze	2000	12
The engine oil filter	500	
The air filter	1000	12
The engine oil	500	
Spark plugs	2000	12
Engine oil drain screw seal	500	
Lower hose connector between transmission and axle	2000	12
Oil suction filter O ring, axle side	2000	12
Oil suction filter O ring, converter side	2000	12
Drive axle oil and transmission oil	2000	12